# Table of Contents

INTRODUCTION ..... 3
ELEMENTS OF A DUST EXPLOSION ..... 5
HAZARDOUS AREA CLASSIFICATION ..... 6
EUROPEAN UNION APPROVALS ..... 9
MONITORING POINTS ON SELECT MACHINERY ..... 12
SUMMARY OF REQUIRED MONITORING POINTS ON MACHINERY ..... 16
SENSOR DEVICES ..... 17
SYSTEM DESIGN & CONFIGURATION ..... 31
EQUIPMENT SELECTION ..... 38
INSTALLATION ..... 39
TESTING AND SYSTEM HANDOVER ..... 44
MAINTENANCE ..... 47
SUMMARY ..... 48
REFERENCES ..... 49

## Introduction

The dangers and risks of dust explosions in grain facilities are well established and many companies are now adopting safety measures to mitigate those risks. Hazard monitoring is a common term that describes the equipment and process of monitoring grain handling equipment and facilities for proper operation and the conditions that can lead to the creation of a heat source that can initiate an explosion. There are a myriad of choices of hazard monitoring equipment designed specifically for grain handling and processing equipment such as bucket elevators, belt conveyors, drag conveyors, rotary airlocks, roller mills, hammer mills, grinders, etc. However, before deciding on the specific type of sensor and control, you must first decide on what parameters you are going to monitor and which safety standard applies to your facility. For some industries and equipment, laws and regulations are mandatory. In the United States, the starting point historically has been the Occupational Safety & Health Administration (OSHA) *OSHA Standard – 29 CFR / Grain Handling Facilities – 1910.272* and the National Fire Protection (NFPA) *NFPA 61: Standard for the Prevention of Fires and Dust Explosions in Agricultural and Food Processing Facilities.* More recently, the NFPA has issued *NFPA 652 Standard On The Fundamentals Of Combustible Dust, 2019 Edition*, and *NFPA 654: Standard for the Prevention of Fire and Dust Explosions from the Manufacturing, Processing, and Handling of Combustible Particulate Solids (2020)*, among many others. Internationally, there are standards bodies that provide guidance for hazard monitoring such as CSA Group (Canada), ATEX (Europe), IEC (global, based in Switzerland), INMETRO (Brazil), EAC (Russia), and so on.

These standards are only the starting point for the minimum requirements. The plant manager or other responsible person should determine which areas are dust hazard environments and then consider each piece of machinery and determine which parameters need monitoring. The plant manager should then look at other machines in the plant that may fall outside the scope of these documents, but which warrant monitoring.

An organization's budget constraints in implementing a hazard monitoring system will always be a primary consideration and the manager must assess the risk and cost of the options to the company and shareholders for an acceptable level. However, the benefits of hazard monitoring can extend beyond protecting personnel. A properly installed and maintained system can also protect facilities, capital equipment and product; improve operational efficiencies; and help ensure uninterrupted revenue and profit for the producers. However, as with all insurance policies, you should not skimp and should purchase as much as you can afford; the typical cost for hazard monitoring equipment is quite reasonable. Hazard monitoring is good insurance and a sound investment in terms of the mitigation of the risks of loss of life, property and product.

Many companies will install sensors and controls on every piece of equipment in the plant. Unfortunately for many other companies and plants, hazard monitoring is implemented after the "horse has bolted", i.e. after a major disaster has occurred. Today, with the growth of social media and electronic communication, and education by grain industry associations, grain dust explosion reporting is much more forthcoming and plant managers and grain companies are becoming more aware of the frequency of these events and the potential for disaster. A great resource for aggregating incident reporting is Dust Safety Science, viewable at _____. The following table, courtesy of Kansas State University, lists recorded explosions reported within the industry through 2005 (see Table 1).

| Year | 1996 | 1997 | 1998 | 1999 | 2000 | 2001 | 2002 | 2003 | 2004 | 2005 | Total |
|---|---|---|---|---|---|---|---|---|---|---|---|
| **Number** | 13 | 16 | 18 | 7 | 8 | 9 | 8 | 8 | 6 | 13 | 106 |

**Table 1:** Historic agricultural Dust Explosions in the US (Source: KSU March 20, 2006 Report).

From the table above, it is clear that education, increased awareness and improved monitoring techniques have had a positive effect. However, since 2005, the number of incidents has hovered just below ten per year (see Figure 1), demonstrating the continued need for education and implementation of hazard monitoring systems.

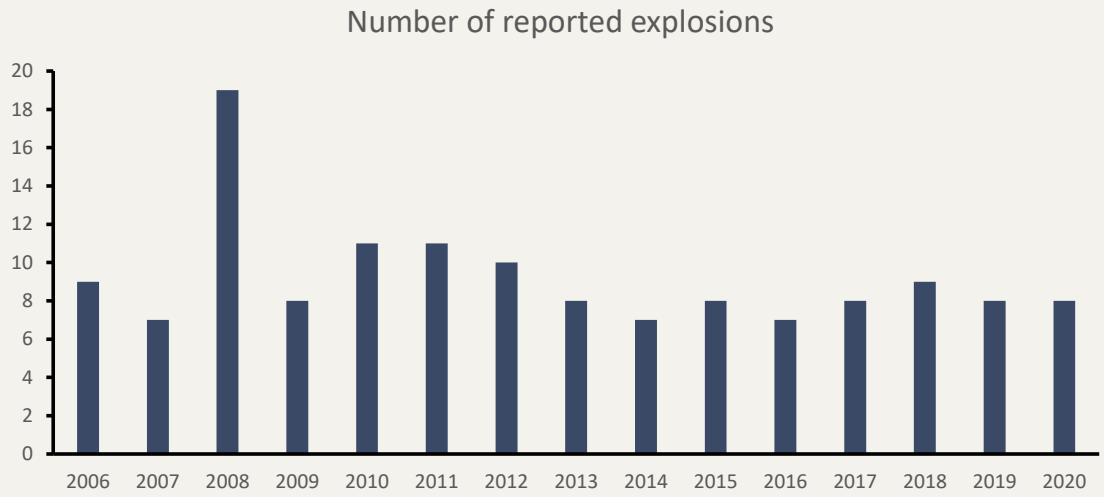


**Figure 1:** Agricultural Dust Explosions in the USA (2006-2020),
Dr. Kingsly Ambrose, Department of Agricultural and Biological Engineering, Purdue University. Accessed at: _____.

Unfortunately, these events are only what are reported; many more explosions go unreported and still more events occur daily which fortunately do not result in explosions but do cause serious machine down time and lost productivity. Hazard monitoring education at trade expos and technical conferences helps to educate users of the hazards and makes them more aware of the need to monitor the equipment and to be more comfortable making not just the required investment, but also going the extra mile. Some customers install monitoring equipment in stages and start by meeting the minimum requirements with carefully chosen equipment and systems that can be easily expanded later to encompass other machines in the plant as further funds and resources become available. Once a company decides which machines to monitor, and which areas on those machines could cause danger, then they can consider the type of sensor and control system. This paper will provide a guide to selecting equipment, taking into consideration these regulatory requirements and practical factors.

As with any type of electrical device used in an industrial environment, its usefulness, service life, reliability and maintenance cost is very much dependent upon the quality of the initial installation. This is even more evident when we consider the unique challenges within the feed and grain industry. There are many outdoor applications where the equipment and installation must withstand harsh environmental conditions including wide ambient temperature fluctuation (–40º F to + 120º F), wind, rain, sleet, ice and snow. Often, seasonal workers and inexperienced employees have to work with and around the equipment. There can also be rodents, which are attracted to the food sources around the plant, and gnaw on sensor cables causing operating and maintenance problems with the monitored equipment. We will explore the practical implementation of installing hazard monitoring systems in the harsh environment of the feed and grain industry to be reliable and trouble free.

Once installed correctly, the hazard monitoring system must be checked and maintained on a regular basis. The frequency of this testing is determined by the user taking into consideration the recommendations of the equipment manufacturer. Manufacturers of specific equipment usually have recommendations on how to maintain and how often to test equipment; however, it is the user of the equipment who must ultimately decide on the frequency of tests and maintenance to be carried out. High quality, professionally installed systems should not need a great deal of maintenance or periodic testing. However, external influences on the system can compromise even the most failsafe designs. As such, periodic system testing is extremely important and should be a priority in any plant's preventative maintenance program. As per OSHA 1910.272 Appendix A,

*"It is imperative that the prearranged schedule of maintenance be adhered to regardless of other facility*

*constraints. The employer should give priority to the maintenance or repair work associated with safety control equipment, such as that on dryers, magnets, alarm and shut-down systems on bucket elevators, bearings on bucket elevators, and the filter collectors in the dust control system. Benefits of a strict preventive maintenance program can be a reduction of unplanned downtime, improved equipment performance, planned use of resources, more efficient operations, and, most importantly, safer operations."*

We will look at some important considerations with regard to maintaining hazard monitoring equipment, but first, let us review and understand the basic elements needed for a combustible grain dust explosion.

## Elements of a Dust Explosion

There are five elements needed for a grain dust explosion, commonly called the dust explosion pentagon (see Figure 2):

1. **Fuel**, in the form of combustible dust, is a byproduct of grains, sugar, biomass and other agricultural products;
2. **Heat** is the ignition source and can be generated by machinery, improperly used or faulty electrical equipment, welding, and open flames or sparking sources;
3. **Oxidant** is the oxygen in air;
4. **Dispersion** of dust particles in sufficient quantity and concentration occurs during the normal conveyance and handling of the products; and,
5. **Confinement** of the dispersed dust, which occurs within commonly used conveying and processing equipment, such as bucket elevators, belt conveyors, roller mills, etc. and storage bins, boot pit areas, tunnels and other confined structures.

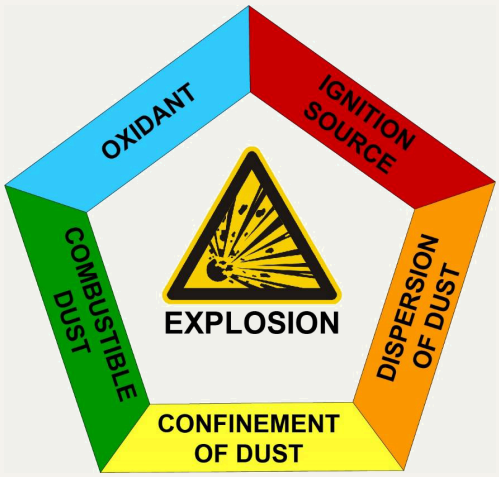


**Figure 2:** Explosion Pentagon.

To prevent a catastrophic grain dust explosion, the solution is simple: eliminate any one of the five elements from the pentagon. However, that is not an easy solution to implement in grain facilities. Grain dust (the ***fuel***) is always present even with active dust control practices and good housekeeping. Oxygen (the ***oxidant***) is ever-present in the environment. Controlling oxygen levels is a proven methodology but is practical only for enclosed, smaller structures. Lowering the level of airborne dust (the ***dispersion***), can help but does not completely inhibit dispersion. By design,

many material handling conveyors and equipment ***are*** enclosed (the ***confinement***) in order to contain the grain they are conveying or processing. These first four elements are always present, to varying degrees, during the normal operation of a grain facility and their associated risks can be minimized through maintenance and the judicious use of technology. The last required element, the ***ignition source,*** is where we focus our hazard monitoring attention, as it is the most practical and cost efficient method to identify equipment that is generating a source of heat and ignition.

## Hazardous Area Classification

**NEC 2020: Classes, Divisions, and Groups and Zones**
Once a company decides on which machinery parameters to monitor, then the monitoring equipment specification process can begin. The first consideration must be the suitability of the equipment for safe operation in and around the facility. Areas within and around a grain handling facility can be classified according to the National Electrical Code. NFPA 70, National Electrical Code 2020: Article 500 Hazardous (Classified) Locations, Classes I, II, and III, Divisions 1 and 2, defines locations where fire or explosion hazards may exist due to flammable gases, flammable liquid-produced vapors, combustible liquid-produced vapors, combustible dusts, or ignitable fibers/flyings. The areas concerning combustible dust, for example grain dust, are all Class II and can be found in Article 500.5 Classification of Locations, paragraph (C)(1) and (C)(2). Note: NFPA 70, National Electrical Code 2020 is often referred to simply as “NEC”. However, this standard updates every three years so one should always include the year in the description, such as, “NEC 2020” which is the convention we will follow in this document.

Areas containing explosive gases, such as hexane gas, are Class I. This paper focuses primarily on dust hazards; however, serious consideration is required for other hazards such as hexane gas, which is used quite extensively in certain grain handling processes. Hexane gas is extremely explosive and because its vapor density is heavier than air it can accumulate in pockets and low areas such as reclaim conveyors and bucket elevator boot pits. Quite devastating explosions have occurred in plants where hexane has leaked from one plant to another and been ignited by a source in the receiving plant. NEC 2020 Classes are summarized in Table 2.

| Class | Definition |
|---|---|
| I | Flammable gases, flammable liquid-produced vapors, combustible liquid-produced vapors. |
| II | Combustible dusts |
| III | Ignitable fibers/flyings |

**Table 2:** Guide to NEC 2020 Classes

Dust hazard Class II locations are further defined by Divisions according to their potential danger; Division 1 is the highest risk, followed by Division 2, and are summarized in Table 3.

| Division | Definition | Typical Area/Location |
|---|---|---|
| 1 | Hazard is present under normal operation | Inside the head or casing of a bucket elevator |
| 2 | Hazard is present only under abnormal conditions | Tunnels inside the plant |

**Table 3.** Guide to NEC 2020 Class II Divisions

Table 4 shows the three groups of combustible dust for Class II locations:

| Group | Combustible Dust | Includes these materials |
|---|---|---|
| E | Metal | Aluminum, magnesium |

| | | |
|---|---|---|
| F | Carbonaceous | Coal, carbon black, charcoal |
| G | Dust not included in Group E or F | Flour, grain, wood, plastics, chemicals |

**Table 4:** Guide to NEC 2020 Class II Groups

NEC 2020 also includes zone classification system in Article 506: Zone 20, 21, and 22 Locations for Combustible Dusts or Ignitable Fibers/Flyings. Zone 20, 21, and 22 locations are those in which combustible dust or ignitable fibers/flyings are or may be present in the air or in layers, in quantities sufficient to produce explosive or ignitable mixtures. Table 5 summarizes Zone 20, Zone 21, and 22 locations.

| Zone | Descriptions |
|---|---|
| 20 | Dust or fibers/flyings present continuously or present for long periods of time. |
| 21 | Dust or fibers/flyings likely to exist occasionally under normal conditions; may exist frequently due to maintenance, repair or leakage; present for long periods of time; could be released by malfunctioning equipment; or, fibers/flyings could cause electrical equipment failure and to become an ignition source. |
| 22 | Dust or fibers/flyings are not likely to occur or will persist for only a short period; are normally contained but could be released. |

**Table 5:** Guide to NEC 2020 Zones.

Zone 20, 21, and 22 Group IIIB combustible dust and fibers/flyings are equivalent to Class II, Groups F and G (Coal, carbon black, charcoal, flour, grain, flour, wood, plastics and chemicals).

According to NEC 2020, 500.8, electrical equipment and instruments installed in and around a grain handling facility (i.e., Class II), must be listed or approved for use in the specific classified area, including the specific division and group. Furthermore, the device must be labeled to include the appropriate Class, Division, and Group. NEC 2020 506.9 lists similar requirements for suitability and marking for equipment employing zones classification.

| Standard | Requirement |
|---|---|
| NFPA 61 (2020) 9.4.6 | Electronics in Class II areas must follow Article 502 of NEC. |
| NFPA 652 (2019) 9.4.6 | Class II locations need to be identified and documented. Electronics in Class II areas must follow Article 502 of NEC. |
| NFPA 654 (2020) 9.4.2 | Class II locations need to be identified and documented. Electronics in Class II areas must follow Article 502 of NEC. |

**Table 6:** Guide to NFPA Standards for Approved Sensors.

**Note:**

1. Equipment must be approved for the specifi Class of hazardous location; as such, Class I (gas hazard) approved products are not automatically approved for Class II (dust hazard). Similarly for Zones classification, equipment approved for Zone 0, Zone 1, or Zone 2 (all gas hazardous locations) are not approved for Zone 20, Zone 21, or Zone 22 (dust and fibers/flyings hazardous locations).
2. Equipment approved for use in Division 1 areas, however, may be used in Division 2 areas within the same Class. Equipment listed for Zone 20 is permitted in a Zone 21 or Zone 22 location for the same dust or ignitable

fiber/flyings.

3. It is of paramount importance to only install and use electrical or electronic devices listed or approved for use in that specific hazardous location. Electrical or electronic devices can become an ignition source if they are not properly designed and approved by a Nationally Recognized Testing Laboratory (NRTL).

Products installed in a hazardous location must be listed or approved by an NRTL such as Underwriters Laboratories (UL), Canadian Standards Authority (CSA), Factory Mutual (FM), Edison Testing Laboratory (ETL). OSHA maintains a list of approved NRTLs at .
Tests carried out by the laboratory are specific to the standard applied and one must be careful to use equipment approved to the applicable standards.

**Figure 3:** Examples of Common NRTL logos

Approved products will display a label with the appropriate NRTL listing mark and Company's name. For example, a CSA approved sensor can be used in the US only if the sensor has passed the required US tests. Approval for use in the USA is usually denoted by a small "US" mark applied below the NRTL's logo, similar to this mark:

**Figure 4:** Example of the CSA mark for use in the USA and Canada, and an approved electrical product.

## European Union Approvals

All equipment sold or used in the European Union (EU) must carry the CE mark. Note: Since the UK left the EU, the UKCA (UK Conformity Assessed) marking is a new UK product marking used for goods placed on the market in Great Britain (England, Wales and Scotland). It covers most goods, which previously required the CE marking, known as 'new approach' goods. The CE mark is applied by the manufacturer of the equipment and designates that all relevant European Union health and safety standards have been met. Before the CE mark can be applied to products intended for use in the dust hazard areas within the feed and grain industry, the product must first be certified to the ATEX Directive 2014/34/EU, commonly expressed simply as ATEX or ATEX Directive. Note: ATEX Directive 2014/34/EU is the result of the alignment of the previous ATEX Directive 94/9/EC to the "New Legislative Framework". An excellent official document published by the European Commission, GUIDANCE DOCUMENT ON THE ATEX DIRECTIVE TRANSITION FROM 94/9/EC TO 2014/34/EU, is available at _____. ATEX is a contraction of "Atmosphere Explosible", the French term for "Potentially Explosive Atmosphere". ATEX defines hazardous areas depending on the levels of risk similar to the NEC 2020 hazardous (classified) locations but there are three levels of hazard defined in ATEX whereas NEC 2020 only defines two divisions. A detailed explanation of ATEX is well beyond the scope of this document, but ATEX specifications also include equipment category, level of protection, type of protection, and temperature class, among others. Similar to the NRTLs listed by OSHA, a Notified Body (or NB) is an accredited third party that can certify compliance to the ATEX Directive. See below for an example of an ATEX label.

NEC 2020, Article 506: *Zone 20, 21, and 22 Locations for Combustible Dusts, Fibers, and Flyings.* provides detailed guidance for the correlation and equipment suitability between division classification system and the zone classifications.

| ATEX Zone | ATEX Definition | Suitable in NEC 2020 Division |
|---|---|---|
| 20 | Dust Hazard present continually, or for long periods | 1 |
| 21 | Dust Hazard likely to be occur in normal operation | 1 |
| 22 | Dust Hazard not likely to occur or for a short period only | 2 |

**Table 7:** A brief guide to ATEX Zones and NEC 2020 Class II Divisions.

**Figure 5:** Example of the ATEX mark, and an approved electrical product.

(Photograph courtesy of Uniking, Ltd)

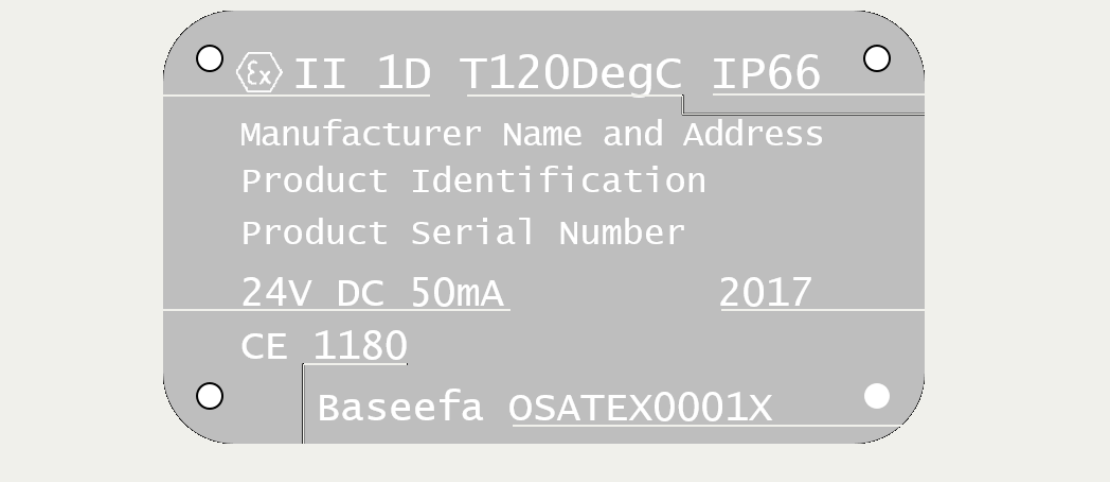


**Figure 6:** Example of ATEX label.

**ATEX Coding:**
Ex II 1 D

**Equipment Group:**

| | |
|---|---|
| I | Mining |
| II | Non-Mining |

**Equipment Category:**

| | | |
|---|---|---|
| 1 | Very high protection | Zone 20 |
| 2 | High protection | Zone 21 |
| 3 | Normal protection | Zone 22 |
| D | Dust hazard | |

**Guide to Ingress Protection (IP):**

| | |
|---|---|
| **Dust** | |
| IP 5x | Dust protected |
| IP 6x | Dust tight |
| **Water** | **Protected against:** |
| IP x4 | Splashing water |
| IP x5 | Water jets |
| IP x6 | Powered water jets |
| IP x7 | Temporary immersion |
| IP x8 | Continuous immersion |

**Worldwide Approvals**
Due to the many standards and approvals for different countries, the costs of obtaining and maintaining these approvals can be significant for the equipment manufacturer and ultimately for the equipment user. As such, a global standard would indeed prove a better solution. IECEx is a standard gaining acceptance in many countries and in fact, harmonization efforts have taken place and further efforts are underway.

ATEX
(European Union)

IECEx
(Australia)

InMetro
(Brazil)

**Figure 7:** Examples of International Approval Marks.

## Monitoring Points on Select Machinery

The following figures illustrate the most common monitoring points on select grain handling machinery. The end user should always evaluate each individual piece of machinery for potential sources of ignition and monitoring needs as machinery performance can vary significantly and each machine may have its own unique behavior.

These are the monitoring points we will illustrate; additional sensor considerations follow in later sections:

- Bearing Temperature Sensor: Worn or failing bearings can generate excessive heat and, in the event of a catastrophic failure, the bearing can break apart and cause metal-on-metal sparking.
- Surface Temperature Sensor: Surface temperature sensors can monitor small flange bearings and auxiliary equipment such as motors, gearboxes and tail pulley alignment on enclosed belt conveyors. They can also measure ambient temperature as a reference for other temperature monitoring.
- Belt Misalignment Sensor: A belt misalignment sensor will indicate when the conveyor belt is about to rub on the conveyor enclosure. A misaligned belt can cause excessive heat.
- Speed Switch Sensor: A shaft-mounted speed switch or speed sensor monitors conveyor speed for slowdown. Slowdown can indicate low belt tension or slippage on the head or drive pulley, which can result in friction, a source of heat. Tail slowdown can also be indicative of excessive load or binding equipment.
- Rotary Shaft Encoder: Another form of speed sensor with options for higher resolution and the option to detect rotational direction of the monitored shaft. When calibrated properly, it can also monitor gate and valve position.
- Plug / Choke Sensor: Plug / choke sensors monitor the condition where grain is no longer free-flowing and has built up to potentially unsafe levels which may cause overloading of equipment, back-legging, filling the boot pit, grain spillage, belt slip, belt misalignment or damage to the equipment.
- Slack/Broken Chain Detection: Commonly referred to simply as a slack chain sensor, this sensor monitors a chain driven conveyor for a slack or broken chain.
- Door Position Inductive Proximity Sensor: This proximity sensor monitors when an overabundance of grain, possibly due to a plug condition, forces open an inspection door, driving a sensing tab on the door out of range of the proximity sensor. It can also detect the position of a slide gate or other equipment.
- Rotary Level Indicator: The rotary level indicator will detect the presence of grain when the grain rises to a level that inhibits the normal rotation of a motor driven paddle.
- RF Capacitance Level Indicator: The RF capacitance level indicator will detect the presence of grain when the grain rises to a level that effects the normal capacitance sensed by the internal electronics.

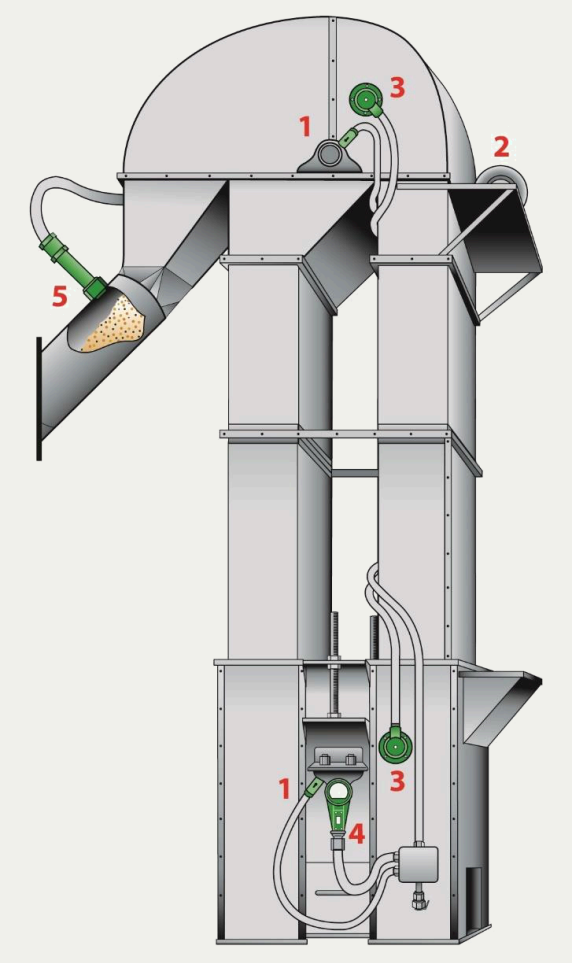


1 Bearing Temperature Sensor

2 Surface Temperature Sensor

3 Belt Misalignment Sensor

4 Speed Switch Sensor

5 Plug / Choke Sensor

Note: If the bucket elevator has a bend (knee) pulley, consider monitoring for bearing temperature and belt alignment

**Figure 8:** Monitoring points on a bucket elevator.

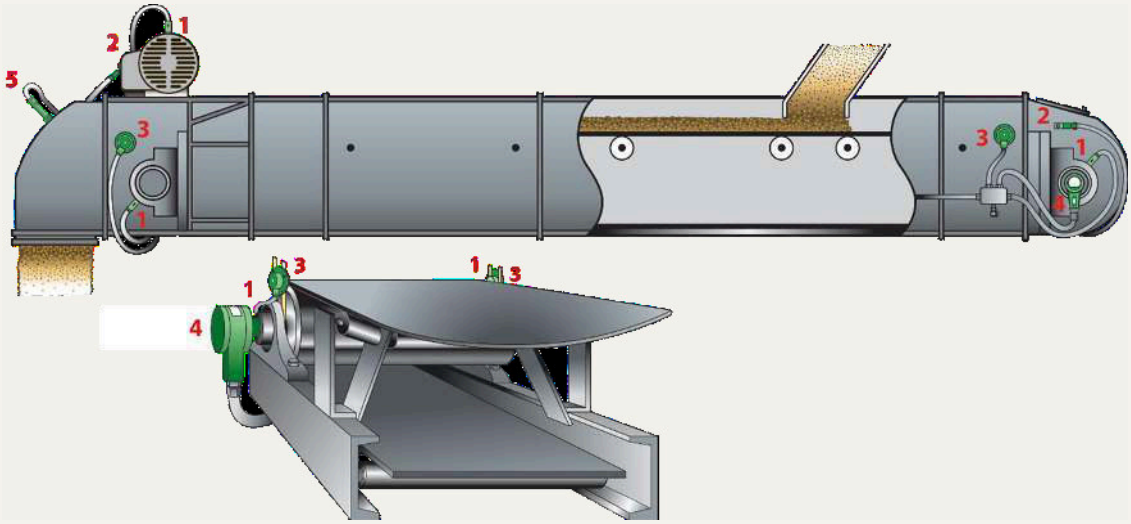


1 Bearing Temperature Sensor

2 Surface Temperature Sensor

3 Belt Misalignment Sensor

4 Speed Switch Sensor

5 Plug Sensor

Note: If the belt conveyor has idler or snubber pulleys, consider monitoring for bearing temperature and belt alignment

**Figure 9:** Monitoring points on an enclosed belt conveyor (top) and open belt conveyor (bottom).

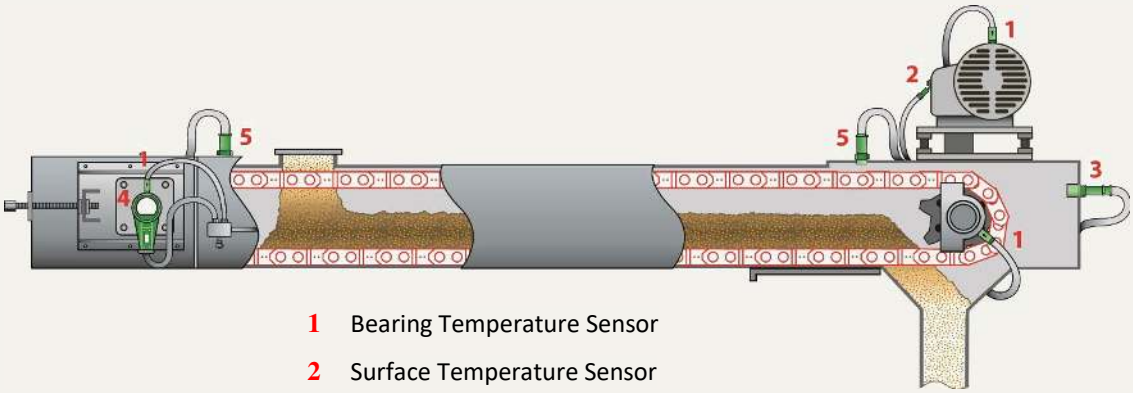


1 Bearing Temperature Sensor

2 Surface Temperature Sensor

3 Plug / Choke Sensor

4 Speed Switch Sensor

5 Slack/Broken Chain Detection

**Figure 10:** Monitoring points on a drag chain conveyor

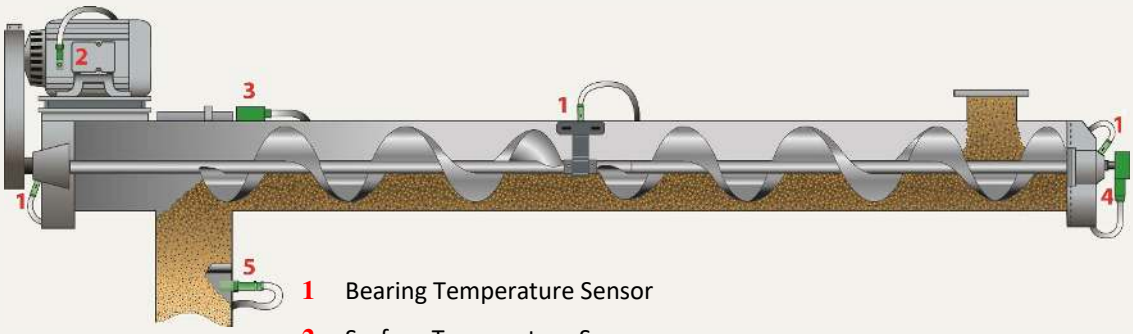


1 Bearing Temperature Sensor

2 Surface Temperature Sensor

3 Door Position Inductive Proximity Sensor

4 Speed Switch Sensor

5 Plug / Choke Sensor

**Figure 11:** Monitoring points on screw conveyor.

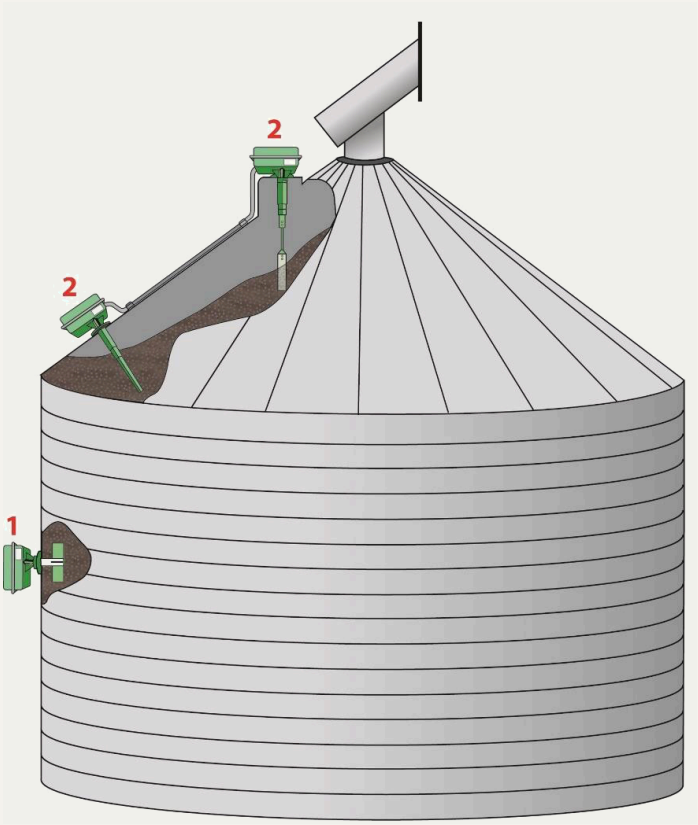


1 Rotary Level Indicator

2 RF Capacitance Level Indicator

**Figure 12:** Monitoring points for bins & silos.

## Summary of Required Monitoring Points on Machinery

The tables below are a guide to OSHA and NFPA regulations with regard to monitoring certain bucket elevators and belt conveyors. As discussed earlier, this should be the starting point and the minimum requirements for each machine. Grain operations personnel should also evaluate other grain handling and auxiliary equipment for similar features that can potentially cause heat or ignition and contribute to enabling dust explosions.

| Reference | Requirement |
|---|---|
| OSHA<br>1910.272(q)(5) | Shutdown bucket elevator when belt speed is reduced by 20% (Inside Legs) |
| NFPA 61 (2020)<br>9.3.14.1.5 | Shutdown bucket elevator when belt speed is reduced by 20% |
| NFPA 652 (2019)<br>9.3.14.3.1 | Shutdown bucket elevator when belt speed is reduced by 20% |
| NFPA 654 (2020)<br>9.3.10.4.1 | Shutdown bucket elevator when belt speed is reduced by 20% |

**Table 8:** Guide to OSHA and NFPA Requirements for Belt Slip.

| Reference | Requirement |
|---|---|
| OSHA<br>1910.272(q)(4)(ii) | Monitor vibration or temperature of bearings inside the leg casing (Inside Legs) |
| NFPA 61 (2020)<br>9.3.14.1.12.1<br>9.3.14.1.12.3<br>9.3.15.2 | Alarm when Bucket Elevator head, tail, or knee bearings get hot or through vibration (Inside Legs). Monitor Belt Conveyor Head and Tail Bearings. |
| NFPA 652 (2019)<br>9.3.14.4.3<br>9.3.14.6.1-3 | No bearings allowed in leg casing. Alert the operator when Bucket Elevator head or tail bearings get hot. |
| NFPA 654 (2020)<br>9.3.10.6<br>9.3.10.9.1-3 | No bearings allowed in leg casing. Alert the operator when the Bucket Elevator head or tail bearings get hot. |

**Table 9:** Guide to OSHA and NFPA Requirements for Bearing Temperature.

| Reference | Requirement |
|---|---|
| OSHA<br>1910.272(q)(6)(i) &<br>1910.272(q)(6)(ii) | Alarm when the belt in a bucket elevator misaligns (Inside Legs) |
| NFPA 61 (2020)<br>9.3.14.1.12.2-3<br>9.3.15.2 | Alarm when the belt in a bucket elevator misaligns or a head, tail, or knee pulley misaligns (Inside legs).<br>Monitor belt conveyor head and tail belt alignment. |
| NFPA 652 (2019)<br>9.3.14.6.1-3 | Alert the operator when a bucket elevator belt or pulley misaligns at the head or tail. |
| NFPA 654 (2020)<br>9.3.10.9.1-3 | Alert the operator when the belt or head/tail pulley in a bucket elevator misaligns |

**Table 10:** Guide to OSHA and NFPA Requirements for Belt Alignment.

| Reference | Requirement |
|---|---|
| NFPA 61 (2020)<br>9.3.15.1<br>9.3.15.3<br>9.3.21.1.5<br>9.3.14.1.13 | Shutdown Bucket Elevators and Conveyors when plugged. |
| NFPA 652 (2019)<br>9.3.14.7.1<br>9.3.15.2.1 | Shutdown Bucket Elevators and Enclosed Conveyors when plugged. |
| NFPA 654 (2020)<br>9.3.10.10.1<br>9.3.11.2.1 | Shutdown Bucket Elevators and Enclosed Conveyors when plugged. |

**Table 11:** Guide to OSHA and NFPA Requirements for Plug / Overflow Condition.

## Sensor Devices

s explained earlier, monitoring sensors in dust hazard locations must be approved for use in those environments. The sensors are typically specialized for the feed and grain industry and standard industrial sensors are not normally used. The sensors need to be able to stand up to the extreme conditions found in the feed and grain industry and must also be safe to use within the potentially explosive dust atmosphere. Here are some of those sensors.

**Belt Slip Sensors**

Bucket elevators and belt conveyors consisting of two pulleys and a belt are capable of generating dangerous amounts of heat in the event of belt slip. Belt slip on the drive pulley can occur when the belt is loose or is overloaded. If a belt could be infinitely tight and capable of handling an infinite load then it would never slip, and the drive motor running at constant speed would eventually stall when the load surpassed its full load rating. As the load increases on a 3-phase induction motor, they slow down only very marginally; they run at almost constant speed and when overloaded they stall. The motor load current during belt slip is typically less than the normal running load current and therefore contrary to common belief; current detectors or amp meters are not a good indication of belt slip. Belt slip must be detected by monitoring the speed of the belt directly from the belt or indirectly from the tail pulley rpm.

Because a 3-phase induction motor runs at constant speed independent of its load, a single sensor calibrated to the normal running speed can detect belt slip. This sensor is typically mounted on the bucket elevator boot pulley to detect the RPM of a target attached to the shaft. An additional sensor may be required at the head of the machine if speed is adjustable, for example with a VFD. In that case, the ratio of tail speed: head speed is monitored for belt slippage and slowdown.

Note: When installing a speed sensor on a shaft in an underground boot pit that is susceptible to high moisture or flooding, it is important to select a sensor rated for that environment. Here is an example of a speed sensor specification suitably rated for a wet environment:

| | |
|---|---|
| **Cable:** | **6 ft. (2m) – 8 conductor** |
| **Protection:** | **IP67 dust and water tight (fully encapsulated)** |
| **Approvals:** | **CSA Class II Div. 1 Groups E, F, & G (US & Canada)** |

**Figure 12:** Speed sensor environmental protection specification.

Because the target for the shaft-mounted sensor is uniform in shape and its distance from the sensor, only a simple sensor with a short fixed range is required (Figure 13). On bucket elevators and belt conveyors, the speed sensor is normally mounted on the tail pulley.

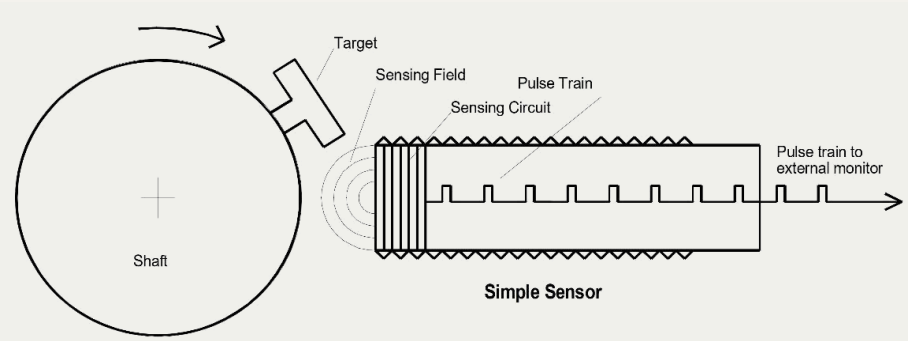


**Figure 13:** Simple inductive shaft speed sensor.

For monitoring the pulley shaft speed, the traditional system of standard inductive speed sensor with a fabricated mounting bracket, shaft mounted target and separate guard has caused some problems over the years with regard to speed sensing reliability. Since installations are rarely identical, there is usually a significant amount of site design and adjustment required to make the complete system function correctly. For that reason, it was common to leave the details of the target, bracket and guard for the field personnel or the millwrights to figure out. Advances in design and technology have led to more reliable and standardized speed sensing installation by using a shaft-mounted sensor system. The sensor, the bracket and the guard are now available as one complete unit attached directly to the shaft with no additional brackets required to hold the sensor. The sensor and target are integrally mounted and there is no on site fabrication or adjustment required and reliability is improved. A typical shaft mounted sensor is shown below.

**Figure 14:** Example of a shaft mounted speed sensor.
(Photograph courtesy of Uniking Ltd.)

Another consideration when installing a speed sensor is the quantity of targets required on the shaft. The quantity of targets required depends on the shaft speed and the reaction time required. For example, a shaft running at 33 revolutions per minute (33 RPM) with 2 targets would produce 66 pulses per minute (66 PPM). If the underspeed alarm is set at 10% of normal running speed, then the alarm trip speed is 59.4 ppm. The minimum reaction time for a certain trip point is the time for the sensor to see the next pulse when running at the trip speed. Therefore, at the 59.4 PPM alarm point, the reaction time in seconds is 60/59.4, which is approximately 1-second. A 1-second reaction time is usually adequate for detecting underspeed on a belt conveyor or bucket elevator. If instead you use an encoder with 500 pulses per revolution on the same shaft, the number of pulses per minute would be 16,500. This would give us a 10% underspeed alarm set point of 14,850 PPM and a reaction time of 60/14,850 seconds (4 mS). Even if the control circuitry could count this fast, this reaction time is far quicker than what is required for a belt conveyor or bucket elevator and provides no additional benefit to its protection and just adds complication and cost. As we can see from Table 12, if we require a reasonably quick alarm reaction time of around 1 second, only 4 targets are required for shafts running normally at 15 RPM or higher.

| Shaft Speed (RPM) | # of Targets | Reaction Time for 10% Underspeed (Seconds) |
|---|---|---|
| 30 to 60 | 2 | 1.1 to 0.56 |
| 15 to 30 | 4 | 1.1 to 0.56 |
| 6 to 15 | 10 | 1.1 to 0.44 |
| 3 to 6 | 20 | 1.1 to 0.56 |
| 1 to 3 | 60 | 1.1 to 0.37 |

**Table 12:** Reaction times for shaft speeds and number of targets required to achieve the reaction time.

Speed sensors for monitoring shaft speed are available in three standard formats: a simple sensor; an intelligent sensor, and a combination of both (see Figure 15). The combination sensor provides both an output relay signal for direct connection to an alarm or interlocking shutdown and an analog output for remote display of the speed on a control panel, programmable logic controller (PLC) or tacho display. The analog output historically, and still common today, is a pulse signal. However, with the development and growth of automation, PLCs and centralized control systems, sensors with 4-20 mA analog output are growing in popularity. Another trend is sensors with only digital communication and no direct analog output. These sensors typically connect to a main controller via a bus network, commonly RS-485 or Modbus, where the controller communicates with the sensor and performs the control function. The combination sensor of analog output (pulse or 4-20 mA) and relay output is usually preferred as it uses its own non-volatile software with calibration data and the output relay hardwired to the motor starter. With the combination sensor, the PLC or control usually has no control over the shutdown function and only acts as a remote monitor or data logger. However, sometimes the PLC reads the combination sensor analog output for monitoring and control and the relay output will activate a local horn or light for facility operators.

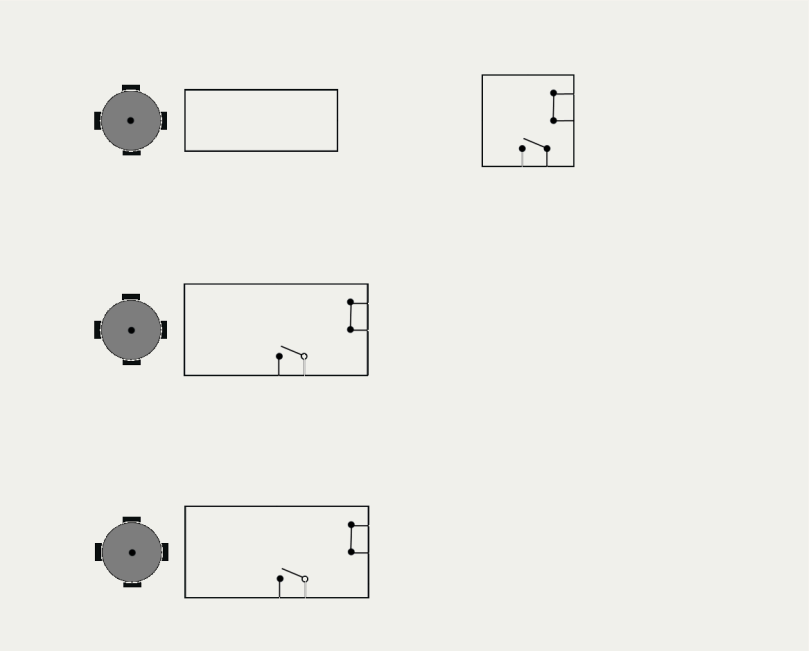

**Figure 15:** Sensor formats for shaft speed monitoring (Simple, Intelligent, and Combined)

Key features to look for in a shaft mounted speed sensor for monitoring grain handling equipment:

- Hazardous area approval (Class II, Division 1, Group G) clearly displayed on the device
- Unique serial number identification for traceability
- Relay contacts normally energized for failsafe shutdown
- Integrated conduit entry for connection of flexible conduit
- LED status indication for quick verification of operation
- Optional analog out (pulse or 4-20 mA) for PLC connection
- Waterproof construction (IP 66 or better)
- Full functional testability

**Belt Misalignment Sensors**
Bucket elevators and enclosed belt conveyors have sidewalls, which a misaligned belt can rub against. Heat generated by this rubbing action can quickly reach a dangerous level, especially near pulleys where the belt side forces are usually the greatest. Figure 16 shows examples of severe belt misalignment on a bucket elevator. There are a number of different sensing technologies available to detect a misaligned belt.

**Figure 16:** Inside elevator (left) and outside elevator (right) showing discoloration and slits in steel casing from the effects of friction and wear due to severe belt misalignment.
(Photographs courtesy of Uniking, Ltd)

**Limit Switches.** Limit switches mount on the side of the elevator casing and activate when a belt moves over and makes contact. Wear on the switch due to belt friction is kept to a minimum by using steel or ceramic rollers to activate the limit switch. However, this type of switch is outdated and can be dangerous. With the belt running against the small roller, typical roller speeds of well over 1400 RPM are possible. Serious problems can arise due to the bearings in the roller failing, resulting in dangerous heat generation. The switch mechanism must move a considerable amount to activate the contact and the mechanics can wear out or become contaminated with material causing the switch to bind and become inoperable. Therefore, this type of misalignment switch is not failsafe in any way. If a switch becomes loose and moves away from its mount, there is no way of realizing that the system is no longer monitoring.

**Rub-Blocks.** Rub blocks, typically constructed of brass, are placed on the side of the elevator casing and incorporate a temperature sensor. The temperature sensor detects the heat generated when the conveyor belt rubs against the brass block. Rub blocks mounted on a hinged door provide easy access for inspection and maintenance. These sensors can also be used to detect the edge of the pulley, if it misaligns.

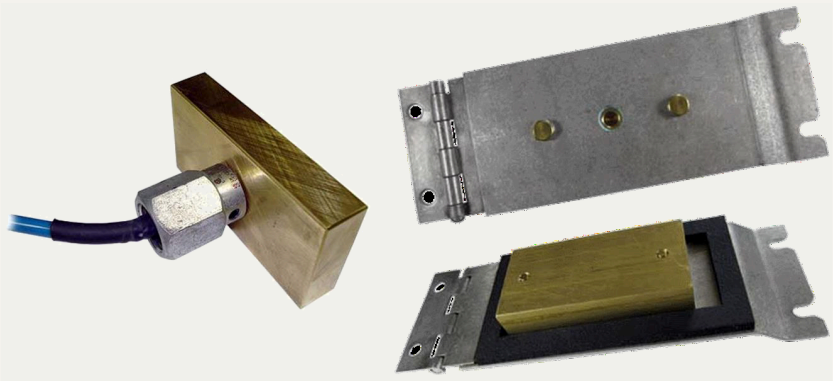

**Figure 17:** Temperature sensor mounted on a brass rub block (left), and rub block installed on a hinged door (right).
(Photograph courtesy of Uniking, Ltd)

Rub block use is common but can be dangerous and extra care is necessary in use and maintenance. Rub blocks require heat from friction of the rubbing belt to detect a belt misalignment and the soft brass face can wear very quickly. A dangerous situation can occur if a belt misaligns and rubs against the soft brass face for a short time but not long enough for the sensor to detect any significant heat build-up. Over time, these sporadic misalignments wear through the soft brass block and can render it ineffective. Plant personnel may only become aware that the sensor is inactive when the brass is removed for visual inspection during planned maintenance.

**Figure 18:** Brass rub block removed for inspection showing severe wear.
(Photograph courtesy of Uniking, Ltd)

Brass rub blocks are an indirect sensing methodology and numerous temperature measurements are necessary to ensure detection of belt rubs. Monitoring for small rises in temperature in a short period is one method to detect intermittent misalignment or walking of the belt. Because the rub block sensor is measuring heat, heating due to environmental effects or machinery self-heating can also cause measurement problems. Techniques exist to compensate for these variables, such as comparing the rub block temperature sensor to an ambient temperature reference, or to the temperature of a sensor on the opposite side of the conveyor. These difficulties are the result of trying to detect belt misalignment indirectly and to compensate for variables that can vary not only within a given facility, but also within a given conveyor.

**Optical Sensors** use an infrared transmitter and a receiver to detect the belt misalignment. Sometimes a number of sensor / receiver pairs are used to provide a warning and then a shutdown as a belt misaligns. However, the set up on these types of systems can be tedious, as they tend to create false alarms due to sensor alignment problems and material/dust covering the sensor's lens. Sometimes air purging can help keep the lens clean but reliable operation is

not assured in the dusty and rugged conditions found in the feed and grain industry; therefore, these sensors are not commonly found in grain and feed.

**Solid State Force Activated Switch.** These devices are used for belt misalignment detection on bucket elevators or belt conveyors. They measure the force applied to them by the belt as it touches their hardened stainless steel face. Even the smallest deflection can be detected immediately so that a control unit can be signaled and the belt can be stopped without delay. Since they need no heat build-up from belt friction to activate, they detect immediately and they can be useful in logging and trending belt misalignments for predictive maintenance purposes. These sensors can also be used to detect the edge of the pulley, if it misaligns. Unaffected by material or dust build-up, no site adjustment is ever required. Units are available with a built in test feature to ensure operation of the sensor and the control circuits, and an integral status lamp shows when the sensor is operated.

**Figure 19:** Force activated belt misalignment switch.
(Photograph courtesy of Uniking, Ltd)

**Figure 20:** Force activated belt misalignment switches installed on an enclosed belt conveyor.

**Common belt misalignment technology.**

| | Initial Cost | Durability | Cost of Ownership | Applications |
|---|---|---|---|---|
| Limit switch | $$$ | ✓ | $$ | Suited to Open Conveyors |
| Rub Block | $ | ✗ | $$$ | Conveyors & Elevators |
| Force Switch | $$ | ✓ | $ | Conveyors & Elevators |

**Table 13:** Guide to common belt misalignment technology.

**Key features to look for in a contact style, force activated belt misalignment switch:**

- Hazardous area approval (Class II, Division 1, Group G) clearly displayed on the device
- Unique serial number identification
- Relay contacts normally energized for failsafe shutdown
- Conduit entry for connection of flexible conduit
- Status LED indication
- Sealed construction
- Full functional testability

**Key features to look for in a rub block/temperature sensor combination for belt misalignment:**

- Hazardous area approval (Class II, Division 1, Group G) clearly displayed on the device
- Unique serial number identification
- Removable sensor probe for testing and maintenance
- Full functional testability
- Conduit entry for connection of flexible conduit
- Sealed construction
- Hinged door mount for ease of inspection
- Gasket for sealing and thermal isolation of brass from enclosure
- Thick brass for longer wear to minimize replacement

**Head & Tail Pulley Misalignment Sensors**

The same sensors used for belt misalignment detection are usually suitable for the head and tail pulleys. If the sensors are installed on the top half of the head pulley, they will detect both belt and/or pulley misalignment.

**Figure 21:** Interior view of belt conveyor head with misalignment sensor monitoring both belt and pulley.
(Photograph courtesy of Uniking, Ltd)

On bucket elevators, sensor placement is extremely important on the tail, as the pulley position will change when adjusting belt tension. Additional sensors may be added to ensure pulley misalignments will be detected as the pulley moves through its range during belt tensioning. On many enclosed conveyors, the tail pulley incorporates a belt re-loading mechanism that runs very close to the casing. Any pulley misalignment can cause the pulley to rub against the casing and create significant amounts of heat. A common method to detect this is to install a lug style continuous temperature sensors mounted to the outside of the casing.

**Bearing Temperature Sensors**
All bearings create heat due to friction when running. When well maintained and lubricated, this heat is minimal and well below the lower ignition temperature for the grain dust. However, if the bearing or lubricant fails in any way, rapid heat build-up can occur and the bearing housing can reach a temperature high enough to ignite any dust accumulated on or around the bearing. Table 14 shows the ignition temperatures for various dusts.

| Dust | Layer or Cloud Ignition Temperature |
|---|---|
| Corn | 250º C (482º F) |
| Rice | 220º C (428º F) |
| Soybean | 190º C (374º F) |
| Wheat | 220º C (428º F) |
| Wheat Flour | 360º C (651º F) |

**Table 14:** Guide to Ignition Temperatures for various dusts (source NFPA 499-2021).

All bearings on the machine should be considered a potential ignition source. Even outside bearings at the head of outside bucket elevators have caused serious explosions. The shaft can conduct heat into the head, or the smoldering/burning grain dust on the bearing housing can be drawn into the head. The bearing may also experience a catastrophic mechanical failure and violently break apart, potentially causing sparking and sending hot debris into the elevator. All bearings will eventually fail and even the very best preventative maintenance programs will not catch all bearings before they begin to fail. The only safe approach is to install automatic bearing temperature monitoring systems, which monitor the bearing temperature continuously. These systems incorporate a bearing sensor mounted to the bearing housing and wired to an alarm control panel. Control relays within the panel provide warning and shutdown contacts when the bearing exceeds a user defined trip point. The figure below shows bearing temperature settings and data on a hazard monitoring system:

**Figure 22:** Continuous bearing temperature-monitoring system.
(Photograph courtesy of Uniking, Ltd)

The hazard monitor pictured above is measuring a bearing temperature of 84º F using an NTC sensor and the ambient temperature close to the location of the bearing is 69º F. If the bearing temperature reaches 30º above ambient (i.e. 99ºF) then the system will alarm and Relay 01 (R1) would activate to shut down the machine or warn the operators. Typical alarm set points for bearing temperature sensors are 140º F or lower. These sensors and controls provide relatively failsafe monitoring of bearings and provide bearing temperature logging and trending for preventative and predictive maintenance. Many systems can provide temperature set points relative to local ambient temperature (as shown above) or an additional pre-alarm set point for early notification; these systems are therefore able to detect a bearing problem much earlier than a sensor with just an absolute trip temperature setting. Some systems also provide rate of rise of temperature monitoring and comparison between temperatures of different bearings, all helping to provide an early indication of a bearing problem.

Bearing temperature sensors are primarily available in two formats: an adjustable depth probe style and a lug style,

shown here:

**Figure 23:** Adjustable depth bearing temperature sensor (top) and a lug style (bottom).
(Photograph courtesy of Uniking, Ltd)

The adjustable depth probe style is mounted by removing the bearing's grease fitting and screwing in the mounting adapter in its place. The mounting adapter provides a grease fitting and a path for grease to flow into the bearing. The probe is adjusted to reach just above the outer race to allow grease to flow and is typically held in place by a compression fitting at the top of the adapter. The compression fitting also prevents grease from flowing back out through the conduit connection. The lug style may have the temperature sensor fixed or soldered into the lug or it may be removable, as shown in the example above. The lug is fastened to the bearing by removing the grease adapter and then re-inserting it through the lug end or it may be attached using an appropriate threaded stud or bolt. The adjustable depth probe style is preferred as the probe's sensing tip is inserted into the bearing pillow block to allow more accurate temperature measurement nearer the source of the heat.

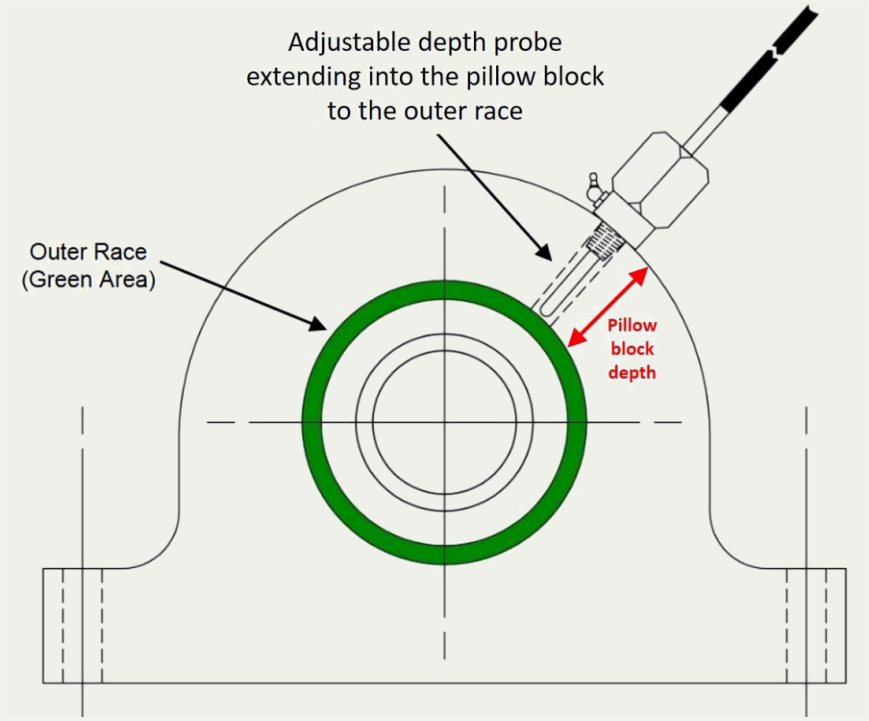


**Figure 24:** Adjustable depth probe temperature sensor installed on a pillow block bearing.

The lug style is commonly used on flange bearings and small pillow block bearings that have a lower profile and may not have the space necessary to mount the adjustable depth mounting adapter. Lug style sensors are also suitable for monitoring motors, gearboxes and auxiliary equipment and processes.

**Figure 25:** Lug style temperature sensor installed on a small flange bearing.
(Photograph courtesy of Uniking, Ltd)

Sensor manufacturers use a number of different technologies to convert the bearing temperature to a readable voltage or current signal by a control unit. The following is a brief summary of these technologies.

**Thermistor sensors**: These are thermally sensitive resistors and are available as Positive and Negative Temperature Coefficient versions (PTC and NTC respectively). The PTC sensor's resistance increases exponentially as the temperature rises above a fixed trip point and the NTC sensor's resistance changes inversely to a temperature rise. PTC sensors are manufactured to change value quickly at a given temperature and are used to indicate when a certain temperature has been reached, commonly called trip point sensors. They are a solid-state version of antiquated thermostat sensors. NTC thermistor sensors provide a proportional signal, which are used for continuous temperature sensing. Their reaction time is quick, they are very stable and they are ideally suited for the temperature ranges involved for bearing monitoring in the feed and grain industry. Certain versions of NTC thermistors have a nominal resistance value of 10,000 Ω and this higher resistance makes long cables run possible without any signal degradation due to cable resistance. Because the NTC thermistor has a wide range of resistance value over its operating range, monitoring systems can easily differentiate open or short circuit conditions.

**Thermocouple sensors** use a junction of dissimilar materials, which produces a small voltage in proportion to the temperature sensed. The technology is well established, but special thermocouple wire and wiring techniques are required since every connection is a potential thermal junction that may affect sensor readings. It is critical to properly install and maintain thermocouple sensors for proper operation. Thermocouples can be susceptible to electrical interference due to the very low signal levels of operation and because of the very small wire diameter (see Figure 26), they are susceptible to damage and breakage and must be adequately protected. It is also not possible to monitor for short circuit conditions as any short in the thermocouple cables becomes a new thermal junction. Legacy thermocouple systems often deploy multiplexing scanners to read the individual sensors and then communicate serially to a controller. These systems are no longer common due to the slower scan times and users are opting for more current, higher speed technology such as EtherNet/IP, PROFINET or Modbus protocols. In spite of these shortcomings, many plants in the feed and grain industry are still using thermocouples with old multiplexing technologies. However, as maintenance costs rise and new technology is developed, plants are switching these old systems out to more modern and more versatile networked bearing temperature systems.

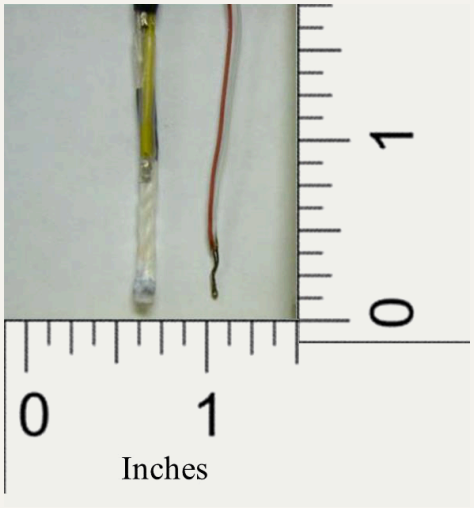


**Figure 26:** Comparison of thermistor (left) and thermocouple (right) bead size and difference in cable diameter.
(Photograph courtesy of Uniking, Ltd)

**Resistance Temperature Detector (RTD)**: The most commonly used RTD has a Platinum element with a resistance of 100 ohms at 0 ºC. The resistance increases linearly with temperature rise. The basic RTD is a 2-wire device but there are 3- and 4-wire versions when higher accuracy is desired, especially over longer distances. The 3- or 4-wire RTD's can be very accurate as the additional wires allow for the compensation for the resistance of the cable connecting the sensor to the control unit. These sensors are relatively expensive and although sometimes used in bearing temperature systems, care must be taken to ensure accurate readings for long cable runs. However, when 3- or 4-wire sensors and compensation techniques are used for long cable runs, the costs for additional wires, installation and programming can be significant. RTDs, and still sometimes thermocouples, are used in various process related industries. In these applications, the sensing element is paired with a separate transmitter that converts the temperature to a 4-20 mA signal for connection to the control system. In the grain and feed industry, sensors that integrate the sensing element and transmitter into a single sensor probe are becoming preferred over these multi-component solutions.

**Analog or 4-20 mA Temperature Sensor**: Some industries and facilities, especially process oriented, prefer 4-20 mA sensors as their standard. Previously, for non-instrument grade sensors, that meant combining a standard sensor with a separate 4-20 mA transmitter. For temperature measurement, the sensor might consist of an RTD or thermocouple. As mentioned in the previous section, new devices combine a sensing element and a 4-20 mA transmitter into a single component. The advantages of this type of sensor is more compact and smaller footprint, fewer components and higher reliability, long transmission distance, and pre-calibrated over a wide range of temperature. While the initial cost is slightly higher than a simple RTD or thermistor, substantial cost savings can be realized for longer cable runs or by eliminating costly discrete transmitters.

**Figure 27:** Temperature sensors with integrated 4-20 mA transmitter (note thicker probe at cable end).
(Photograph courtesy of Uniking, Ltd)

**Semiconductor Sensors**: Silicon semiconductor sensors are manufactured as an integrated circuit (IC) and are generally small and low cost. These sensors may have a unique, permanent digital address, which is polled by a central computer or plant PLC and the data transmitted. However, this type of sensor is usually designed and manufactured to be part of a proprietary system and are not intended for standalone or industry standard controllers.

**Continuous Bearing Temperature Technology Comparison Guide**

| | Initial Cost | Open Circuit Indication | Short Circuit Indication | Protection from Interference | Relative Cable Size | Suitable for Long Runs | Cost of Ownership |
|---|---|---|---|---|---|---|---|
| Thermistor | $ | ✓ | ✓ | ⚡⚡⚡ | ● | ✓ | $ |
| Thermocouple | $ | ✓ | × | ⚡ | • | × | $$$ |
| RTD | $$ | ✓ | ✓ | ⚡⚡⚡ | ⬤ | ✓ (with compensation) | $$$ |
| 4-20 mA | $$$ | ✓ | ✓ | ⚡⚡⚡ | ● | ✓ | $$ |

**Table 15:** Comparison of continuous bearing temperature technology.

**Key features to look for in a bearing temperature sensor:**

- Hazardous area approval (Class II, Division 1, Group G) clearly displayed on the device
- Unique serial number identification
- Conduit entry for connection of flexible conduit
- Robust construction
- Positive mounting to the bearing with grease through capability
- Open circuit detection (detects a wire break/disconnect)
- Short circuit detection (detects a wire short)
- Removable sensor probe for testing and maintenance
- Full functional testability

**Plugged Spout Sensors**
Plug sensors are recommended for all grain and feed conveyors. They are installed in the discharge chute and are connected to shut down the elevator or conveyor immediately upon a plug condition. If excessive stop delays are incorporated for the plug sensor, the boot of the elevator or drive end of the conveyor can quickly fill up with material. This can lead to belt slip, belt misalignment and other serious problems. Mount the plug sensors as close to the discharge as possible but outside the normal material flow. Be careful not to impede material flow with the sensor. Consider mounting an additional plug sensor on the downside of the leg near the boot. If using rotary style indicators, use only units that are failsafe in their design.

**Other monitoring points**
While not always specified by a regulatory agency, common practice in the grain and feed industries includes monitoring of auxiliary machinery as well. Any equipment with rotating shafts, bearings, gates, grain bins, etc. are good candidates to monitor speed, temperature, position and level and include pellet mills, hammer mills, fans, blowers, rollers/grinders, rotary airlocks, bins, and so on.

## System Design & Configuration

A hazard monitoring system may consist of a combination of several elements or devices and capabilities but the three basic elements are sensors, a control device and an alarm/shutdown signal. In a typical system, the sensors are mounted on the machine to detect the potential hazard and translate it into an electrical signal that is then transmitted to a control device. The control device then provides a signal to warn personnel and automatically shuts down the equipment. Hazard monitoring systems can be as simple as a single speed switch programmed to shut down a conveyor at 20% underspeed, or as complex as a PLC plant-wide process control system monitoring hundred or even thousands of points.

There are two primary methods to implement hazard monitoring systems. The first system, the original and still common today, are standalone, control devices dedicated to the hazard monitoring function in dust hazard environments, designed specifically for use within the grain and feed industry and for use with the specialized sensors. If required, this standalone system can connect to the plant PLC system to provide visual/graphical indication to the plant operators at a central location and perform hazard logging and trending functions for plant maintenance personnel. With this type of system, the hazard monitoring function is not dependent upon the PLC and the system will continue to function quite safely and totally irrespective of what the PLC is doing.

The second implementation is when sensors connect directly to the plant PLC without using a standalone controller. Due to the technological advancement and proliferation of PLCs, many plants are now incorporating the hazard monitoring function into the plant process PLC. While the improved processing and bandwidth of PLCs have enabled this migration, extra care and caution must be used as the PLC is not dedicated to the hazard monitoring function and actually performs many processing functions around the plant. If selecting an automation provider for your hazard monitoring system, it is imperative that you ensure they are reputable and employ only the safest and latest technology for sensors, PLC controllers and connectivity devices. The latest safety classified PLCs can give added insurance but the programmer/software engineer must take responsibility for the program/code written to provide the safety function.

The following illustration shows the three basic elements of a typical hazard monitoring system for a bucket elevator. All of the required monitoring points have ***sensors***, connected to a ***control device*** programmed to respond to dangerous conditions and provide an ***alarm/shutdown signal*** to the elevators motor start equipment.

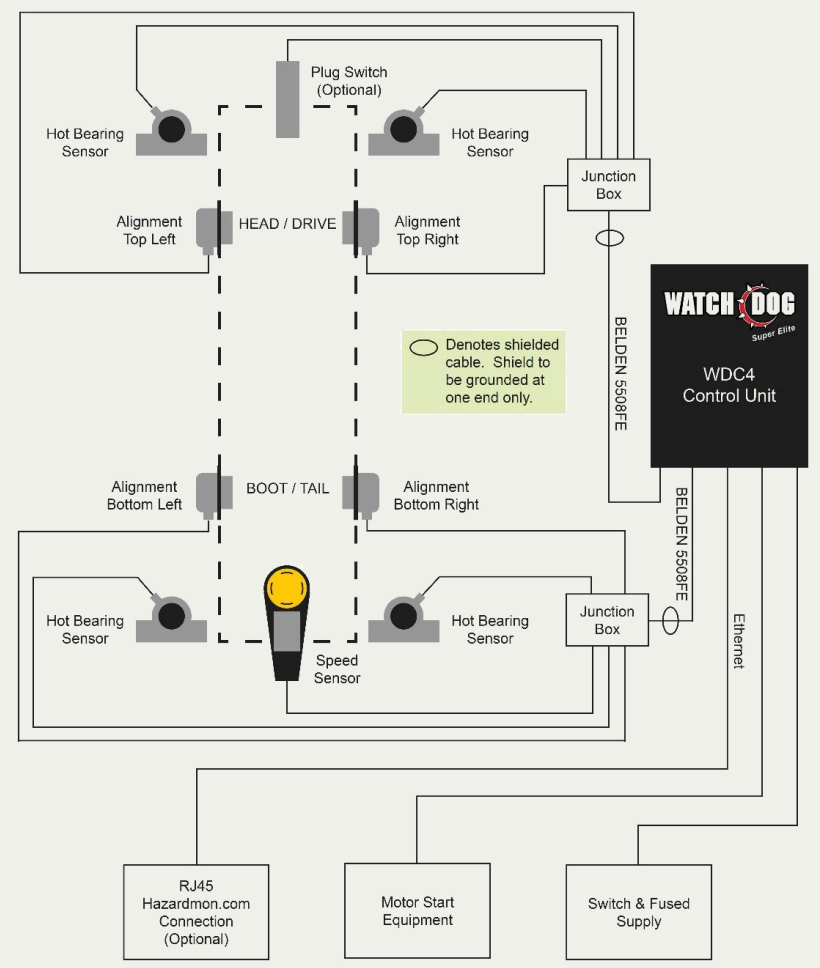


**Figure 28:** Typical hazard monitoring system block diagram.
(Courtesy of Uniking, Ltd.)

**Sensors**
These are the devices we discussed that convert speed, temperature, position, or other physical parameter, into an electrical signal. The sensors are mounted on the machine to detect the potential hazard and translate it into an electrical signal that is then transmitted to a control device.

**Control device & alarm/shutdown signaling**
The control function can take many forms and be implemented in many types of devices. For example, an underspeed output relay can be integrated into a simple speed sensor to produce a speed switch (see Standalone sensor below) or, multiple sensors can connect to a standalone controller as illustrated above in Figure 28. The alarm/shutdown function is typically implemented in output relays to interlock and control the conveyor and other equipment connected to it. Look for a controller with at least two output relays: one for alarming to control feed conveyors and/or to notify operators with a horn or light; and one for equipment shut down. Ensure that the relays are normally energized for failsafe operation and shutdown.

Here briefly are examples of control devices:

1. **Standalone sensor:** One of the most basic hazard monitoring systems is a simple under speed switch. This device, for example, mounts to the tail shaft of a bucket elevator. It is programmed at the conveyor's 100% of normal, no load operating speed. If the shaft speed drops below 80% of normal, it detects the belt slip, the output relay opens and shuts down the leg.

**Figure 29:** Under speed switch on shaft mounting device.
(Photograph courtesy of Uniking, Ltd)

2. **Standalone hazard monitoring controllers & connectivity:** A control function is the capability to control and shut down equipment at a pre-determined set point when a dangerous condition arises. A controller differs greatly from a standalone sensor in that it can monitor multiple points on a machine. This category comprises a very wide variety of controllers with many features from many OEMs.

   Before we look at examples of typical controllers, we will review some of the key general features to look for in a hazard monitoring control unit:
   - Hazardous area approvals (Class II Division 1 or 2, Group G) suitable for the controller's location. Some controllers are suitable only for non-hazardous locations while others have full hazardous location approvals. Always ensure that the NRTL approval and mark is clearly displayed on the device.
   - Unique serial number identification will give traceability and allow the user to identify when hardware or firmware upgrades are available and to ensure they are operating with the latest technology available.
   - Basic operating specifications: supply voltage (12/24 VDC, 120/240 VAC, etc.), environmental rating (IP66, for example), operating temperature limits appropriate for the installation, etc.
   - In addition to alarm/shutdown signals, some controllers will have output relays to identify the specific danger such as underspeed, temperature, belt misalignment or plug condition. These relays, along with the

alarm and shutdown relays, are commonly referred to as discrete signaling when connected to a PLC or other remote display.

- In addition to local notification with a light or horn, some systems will have the capability to send email or text message when a machine's operating parameters exceed the programmed set points. For example, the system can be programmed to send emails or text messages to the maintenance manager when a bearing heats up and temperature exceeds the alarm state set point.
- Some standalone controllers are equipped with serial communications or Industrial Ethernet (EtherNet/IP, PROFINET, Modbus TCP/IP) to transmit system data to PLCs for local display in control rooms or for data logging and analytics.
- Another consideration for controllers is availability of optional features such additional sensor input cards or output relay cards.
- Well-documented instruction manuals are a must to ensure operators understand and operate the system properly.
- Simple, menu driven parameter set-up and adjustment makes it easier, and safer, for operators.
- Built in test and diagnostic functions for the controller itself including output relay functionality for alarm and shut down.
- Most modern controllers now have the built-in or optional capability to connect to the Internet for cloud-based remote monitoring. This feature is growing in popularity as operations managers can now oversee multiple sites from their office computer or on their mobile device. These remote monitoring web sites often provide data logging, trending and alarm analytics.

With those general features in mind, here is a brief look at some of the many types of controllers available:

a. **Specialized standalone controllers** typically have a focused purpose, commonly dedicated to just one or two parameters or one parameter on multiple machines. For example, the monitor below has eight bearing or surface temperature sensor inputs, and provides an alarm and automatic shutdown on up to two machines when a high temperature condition is detected. The device has alarm and status LEDs on the front to locate the alarm source. A built-in test function provides full system verification.

**Figure 30:** Specialized standalone temperature monitoring controller.

b. **General use standalone controllers**, also referred to as a single-leg or single-conveyor controller as they have multiple inputs for the monitoring points typically found on a bucket elevator, belt conveyor or other material handling and processing machinery. These monitoring points include belt speed, belt misalignment, bearing and ambient temperature, plug condition and pulley alignment for belt conveyors and bucket elevators. They often have the capability to monitor additional sensors on nearby auxiliary equipment. This modern hazard monitoring controller also has the capabilities described earlier including multiple output relays, data communication for remote monitoring and display, detailed display with status and sensor readings, built-in test and Internet connectivity for remote monitoring.

**Figure 31.** Typical single conveyor hazard monitoring system.
(Photograph courtesy of Uniking, Ltd.)

c. Whereas a single-conveyor controller monitors one machine, a **scalable/serial system** monitors multiple machines throughout a facility. See previous figure, Figure 22. Sensor input nodes link via a serial network to a single controller and the network may extend for thousands of feet. The nodes have a unique address and the controller will poll each node to retrieve the data associated with each sensor. The controller is commonly linked to the plant's process control system to display data and status on large, multiple screens. These systems are much more flexible and can be scaled and customized to each facility, typically monitoring from 128 to 256 sensors per controller. The diagram below shows a complement of sensors for one bucket elevator, their associated input nodes, controller and serial connectivity as part of a larger monitoring system.

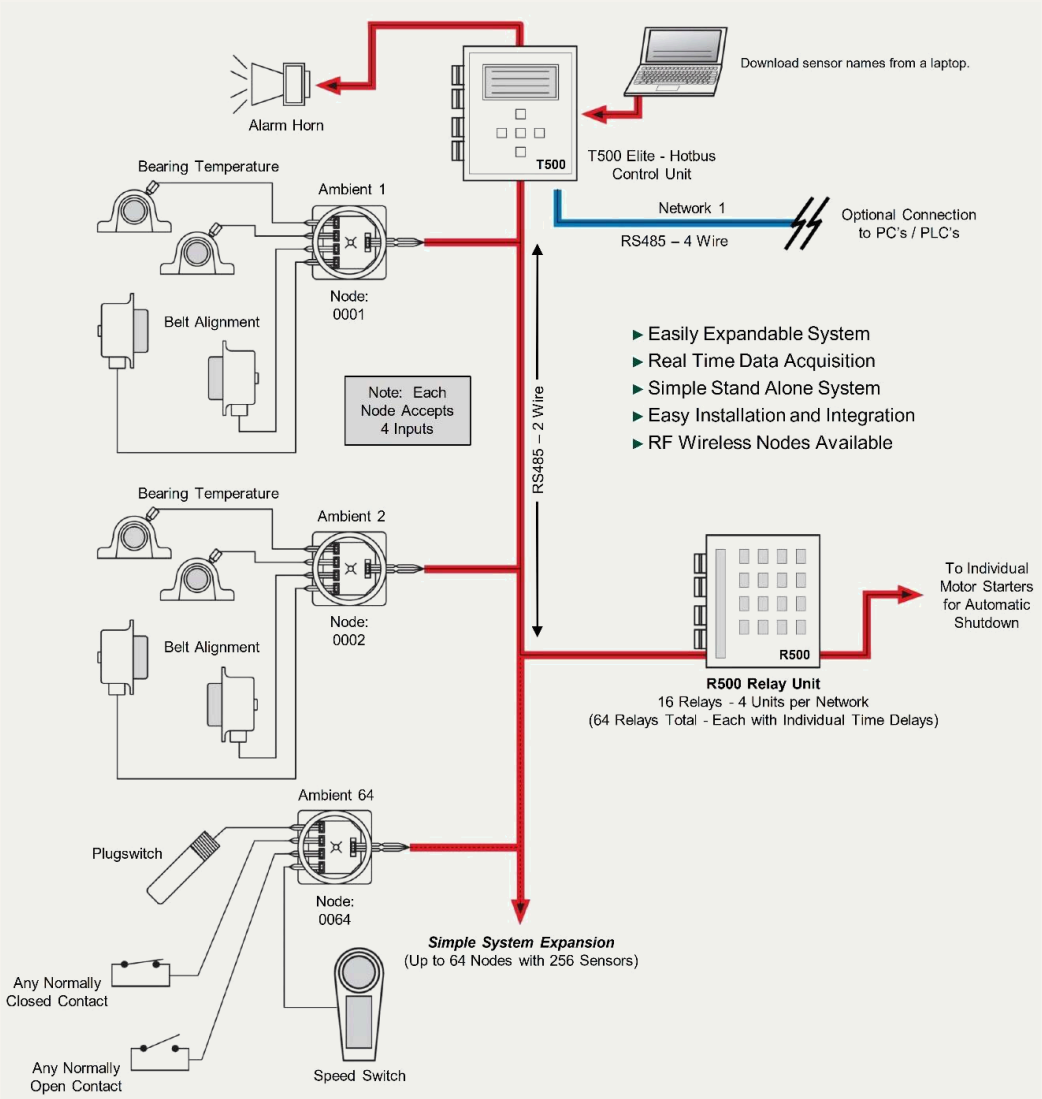


**Figure 32:** Scalable and serially connected hazard monitoring system.

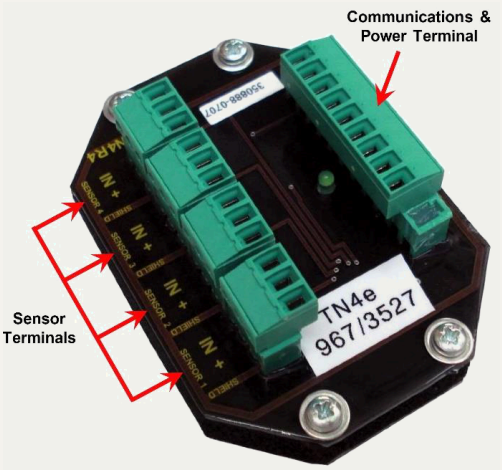


**Figure 33:** Typical serially linked, sensor input node.
(Photograph courtesy of Uniking, Ltd.)

d. Finally, we consider the **PLC-based** hazard monitoring. These are similar to the previous scalable/serial system but there is no standalone, dedicated controller. Companies specializing in the control and automation of grain and feed facilities often develop hazard monitoring systems within their process control PLCs and applications. The sensors are sometimes wired directly into a local PLC IO (input-output) panel but increasingly, remote IO panels are installed throughout the facility and sensor cables are run to the IO panel. The sensor data is communicated over a high-speed network back to the PLC. This method is much more cost effective as many sensors can be integrated into a PLC system over a single Industrial Ethernet connection as opposed to costly sensor IO panels.

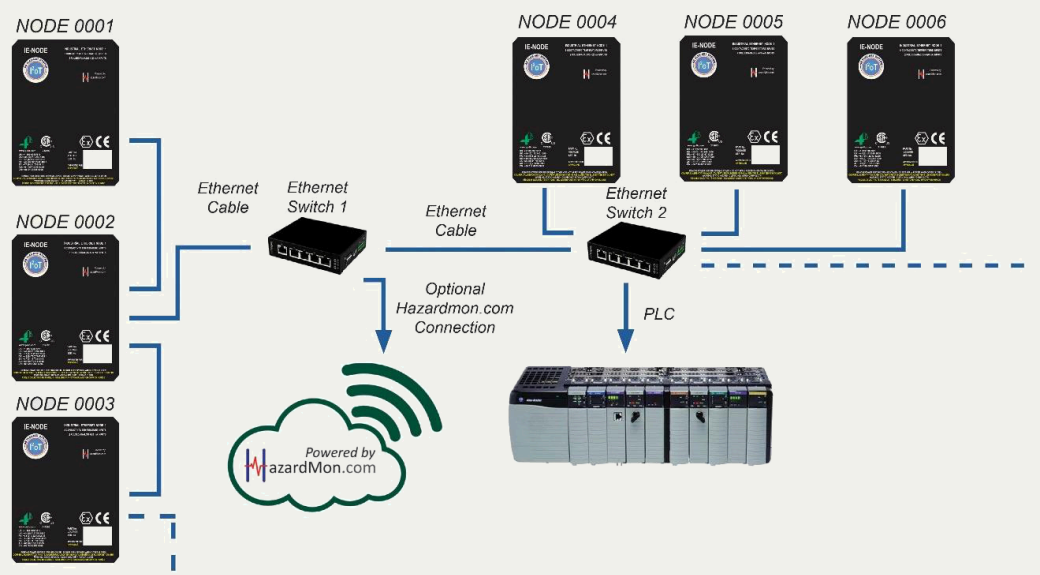


**Figure 34:** System of EtherNet/IP-based nodes connecting sensors to a PLC.

In practice, it is not uncommon for facilities, especially large ones, to have a combination of a centralized

PLC-based hazard monitoring system with several standalone controllers within the same plant. It is sometimes more cost effective to deploy a dedicated, standalone controller than to integrate a single machine's hazard monitoring into a plant-wide PLC, as shown below in a modern flour mill using both single conveyor controllers (three on the top left) and high-speed Industrial Ethernet remote nodes.

**Figure 35:** Combination standalone controllers and Industrial Ethernet nodes.
(Photo courtesy of Uniking, Ltd.)

## Equipment Selection

There are many manufacturers of hazard monitoring equipment. Be careful to choose a well-respected reputable company that specializes in equipment for the feed and grain industry. Check that the manufacturer is able to provide help in product selection and installation advice, commissioning and testing services, and after sales service and technical support. Remember, hazard monitoring equipment should be designed to provide many years of service so it is important to be confident that the original equipment supplier will be available to help with system support should it ever be needed in the future. Most approved equipment should have a unique serial number that allows it to be traced throughout the manufacturing process to the sale of the product and installation. All equipment should be supplied with a detailed installation and operation manual that should be available for the customer to view prior to purchase. Whenever possible, choose equipment that allows for fail-safe installation and offers a high degree of confidence. In general, only equipment that is designed to automatically shut down the machinery when a hazardous condition is detected or when any sensor fails or wire breaks can claim to be failsafe. An alarm horn or alarm lamp is not failsafe and should only be used as an early warning. As such, always install a failsafe shutdown mechanism in addition to any alarm or warning device. The installation of the hazard monitor should not affect the way your plant functions with regard to equipment interlocking. If you already have a system that automatically stops any equipment feeding the monitored machine (i.e. all upstream equipment) then the installation of a hazard monitoring system with automatic shutdown should have no effect on the way this operates.

## nstallation

**General**

Choose a professional electrical installer who is familiar and has experience with installing hazard monitoring equipment within the feed and grain industry. Many good electricians are not experienced with installing these types of sensors and controls. There are challenges specific to our industry, including potentially explosive atmospheres in which the installer has to work safely and in which the equipment has installation requirements to comply with all applicable laws and regulations, confined entry hazards and moving machinery hazards. Always follow the equipment manufacturer's installation and operation instructions; deviating from them may invalidate the hazardous use rating or the manufacturer's warranty.

On new plants, make sure that hazard monitor installation is planned well in advance of the plant's operational deadline. Too often, it is left to the last minute and the pressure on the electricians to complete the installation quickly can lead to errors and potential sub-optimal systems. Most equipment manufacturers offer hazard monitoring equipment so when purchasing an elevator or conveyor, discuss the hazard monitors with them and they can make recommendations and install sensors at the factory before shipping to the site. The manufacturers' machines are designed to accommodate the mounting of the sensors, so if you plan to install on-site, the equipment can already have the proper cutouts for alignment and plug sensors, for example, allowing easy and simple installation.

In an existing plant, give the elevator or conveyor a maintenance overhaul prior to installation of sensors making sure that belts are not slipping under load, belts are not misaligning, and bearings are running within normal temperatures. Take readings and make note of the normal operating conditions including shaft speeds and bearing temperatures to establish a performance baseline for future trending analysis. Paint over or repair any old rub or burn marks on casings prior to installing belt alignment sensors.

When installing an alarm device, consider the location carefully. Audible alarms must be loud enough to be heard over the background plant noise and since plant operators may be wearing hearing protection it is advisable to install a flashing beacon lamp in addition to the audible alarm. Consider special alarm signaling such as text or email notification as discussed earlier.

**Mechanical**

Locate monitors in a suitable control room close to operators. Mount the units at eye level so that operators can readily read the display. Do not locate them inside control panels where operators cannot see them. Do not locate them outside in direct sunlight as elevated temperatures and sunlight can degrade some displays.

Install force activated belt misalignment sensors for enclosed belt conveyors on the topside of the belt, where possible, and inline or very close to the pulley. Make sure that when the belt misaligns it will contact the sensor and not ride over it. Also, follow the manufacturer's installation guidelines that the alignment sensor correctly extends into the conveyor casing so the misaligning belt contacts the sensor first. When installed on the return (underneath) side, hardened grain can cause the belt to ride above the sensor.

If installing rub-blocks, it is recommended to install them on a hinged door since access will be required frequently to inspect the sensor face for wear.

To help prevent mechanical damage and protect from rodents, install sensor wiring inside rigid metal conduit and, where flexibility is required, use short liquid tight flexible conduit with fittings approved for the area. ***Note:*** check with regulatory installation requirements as flexible conduit may have length restrictions.

One of the common problems with conduit systems is the ingress of water. Knowledgeable electricians understand that no matter how well a conduit system is designed and installed, sometimes a loose junction box cover or conduit union

can cause condensation to accumulate. This moisture can be channeled to sensors and over time can accumulate and eventually damage the wires or sensor. As such, low conduit drains approved for the location (see Figure 37) should be installed and sensor wiring should be “teed” with an adequate wiring loop so that water following the wires is not channeled to the sensor. Part of the regular system maintenance should include the cleaning of any accumulated debris from around the conduit drains and the inspection of conduit systems for water ingress. Figure 36 shows hazard monitors installed on the boot of an outside bucket elevator. Belt alignment, shaft speed, and bearing temperature sensors are installed using flexible sealtite with adequate loops and the steel conduit is installed with low point drains.

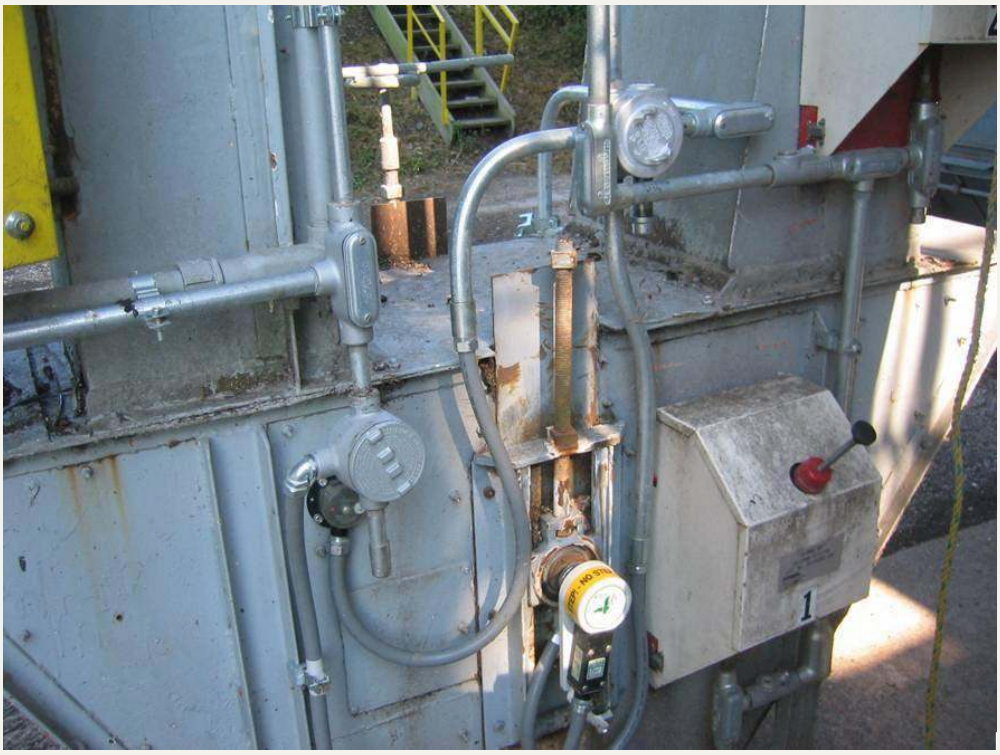

**Figure 36**: A bucket elevator boot with installed hazard monitoring sensors and conduit low point drains.
(Photograph courtesy of Uniking, Ltd.)

**Figure 37:** Approved conduit drain on left and general propose drain on right.

**Network and computer wiring**
Special attention should be paid to the installation of systems with communication cables and systems with low voltage wiring. Shielded cables should have only one connection to ground (usually at the control unit). To verify this, remove the shielded cable ground connection from the control unit end, and connect an ohmmeter between the shield and ground; an open circuit ohm reading will verify that the shield is not grounded anywhere else. Small stranded wires connected to terminals should be installed using a booted ferrule system (see Figure 38) to ensure the mechanical connection of the wire to the terminal and to contain the strands. When connecting sensor cables using wire lugs, make sure that the correct lug size is used.

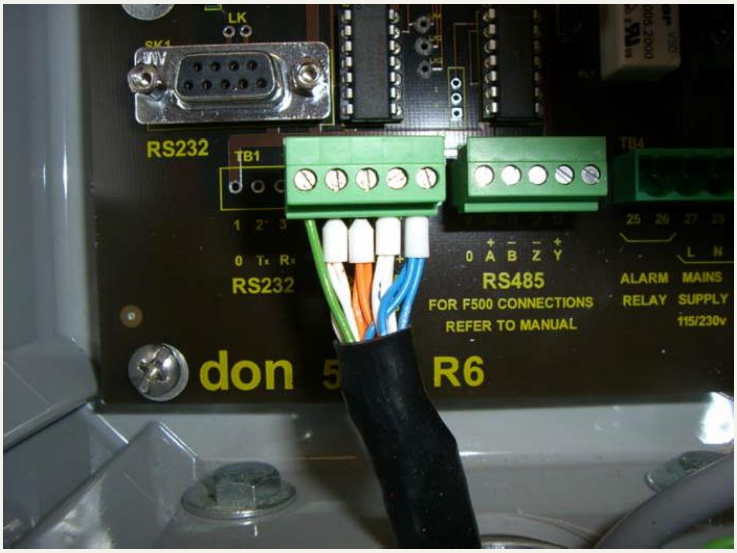


**Figure 38:** Network wires connected to terminals with a booted ferrule wiring system.
(Photo courtesy of Uniking, Ltd.)

Special attention should be made to the shield wire in shielded cables. A braided shield made up of many fine conductors should be carefully handled so that there is no chance of them touching the other conductors and causing a short to ground. Insulate the shield wire using a wire sheath (which can be the outer PVC jacket pulled from standard copper cable). When the cable includes a drain wire, cut back the shield, insulate the drain wire and use it as the shield connection. The shield should be one continuous connection through the system and be connected to ground at one point only. This one ground connection should be made at the cable end, and is normally done at the control unit end.

Network and computer cables should be segregated from higher voltage wiring for safety and functionality.

Some sensors and systems use Intrinsically Safe (IS) wiring methods which must be installed carefully and follow NEC 2020 Article 504. All intrinsically safe wiring must be physically and electrically separated from non-intrinsically safe wiring, and special grounding techniques apply.

Equipment instruction manuals normally include installation wiring schematics. However, these are general guidelines and not specific to the facility where the equipment is being installed. The electrical installer should produce a professional set of wiring schematics specific to the installation, which should include wire numbers, equipment labels, and other specific information (see figure 39).

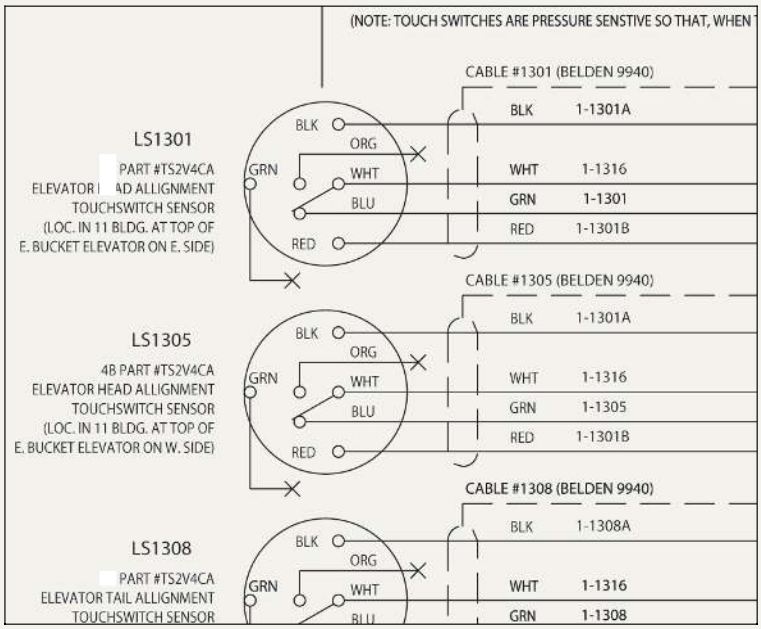


**Figure 39:** Example of typical wiring diagram detail (partial schematic sho n).

When planning the wiring runs keep to a standard color system. If your plant does not already have a standard system, then decide on one. Try to maintain the same wiring color scheme through connections and terminals. Use wire numbers on the wiring schematics and labels on the physical wires. The example in Figure 39 shows part of a typical wiring schematic. The wires have wire numbers, colors are noted, the location of the sensor is noted, and the sensor has a unique identification number and description. The type of field cable used is noted. The manufacturer's part number is noted.

Do not use larger than required signal cables. Larger cables take up more room, are more expensive, and are more difficult to connect into small terminals.

PLC ladder logic diagrams and Input/Output data sheets should be included where applicable and be available to maintenance personnel. Electronic copies of all documentation should be securely backed-up to an external, off-site location.

Never run the machine without an active hazard monitoring system. Keep a suitable number of spare sensors and components on hand, so that plant down time minimized.

During installation, the plant manager should periodically inspect the wiring and conduit installation, making sure that the connections are neat and tidy and a high level of quality is being maintained (see Figure 40 for wiring examples). The installer should test for continuity as each section is completed.

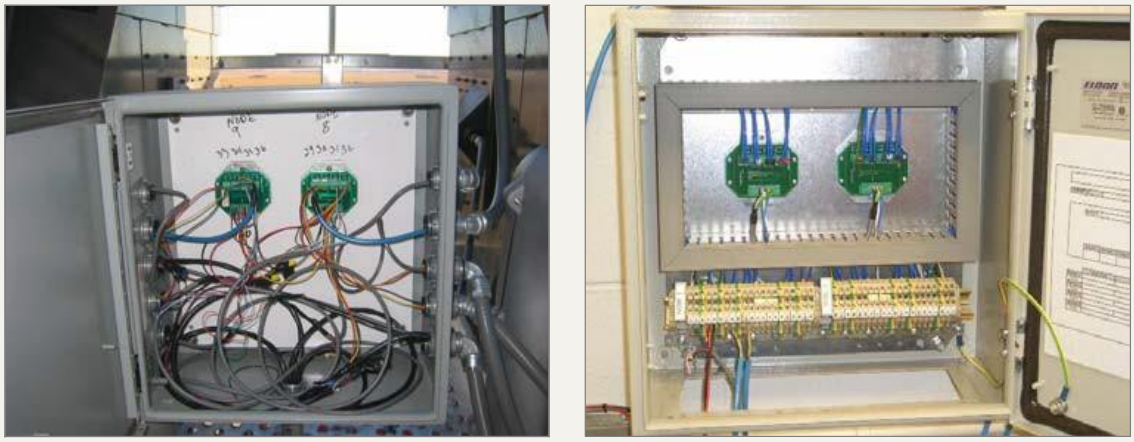

**Figure 40:** Poor wiring installation (left) and good wiring installation (right).
(Photo courtesy of Uniking, Ltd.)

Whenever possible, the same installers should remain on the same job from start to finish. Whenever multiple crews are involved, the standard of installation can suffer and the time taken to complete the job can be longer.

**Speed Sensor Installation**
When installing sensors to monitor shaft speed, use either a shaft-mounted sensor as described earlier or install an inductive speed sensor using a universal sensor mount (Figure 41).

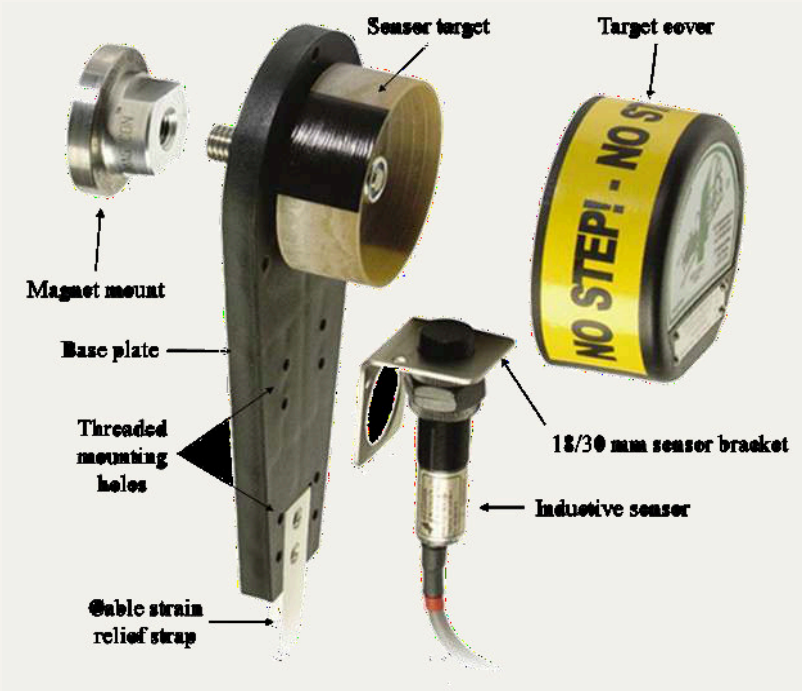


**Figure 41:** Universal shaft sensor mount.

The universal shaft sensor mount speed monitoring system is much easier to install, much safer, and more reliable. Since many machines require periodic belt tensioning that involve moving the monitored shaft, a traditional speed sensing installation requires careful consideration for the attachment of the bracket, which holds the sensor to the machine. The bracket must be able to move with the shaft as the belt is tensioned, so that the target on the shaft remains within the sensor's sensing range. By design, the shaft mounted sensor installation requires no such consideration as the whole assembly is attached to the machines shaft, and therefore moves with it. Also, machine vibration can sometimes cause problems with a traditional shaft speed sensing system for the same reason. The typical sensing range for the inductive sensor is 7/16". If there is a clearance of ¼" between the rotating target and the face of the sensor then the absolute maximum tolerance is 3/16". Under heavy loads and machine vibration, the clearance between target and sensor could exceed 3/16", resulting in periodic false alarms or nuisance shutdowns. When a shaft mounted sensor installation is used, the sensor and target are mounted on the same base plate, so that the distance from the target to the sensor remains the same no matter how severe the vibration is.

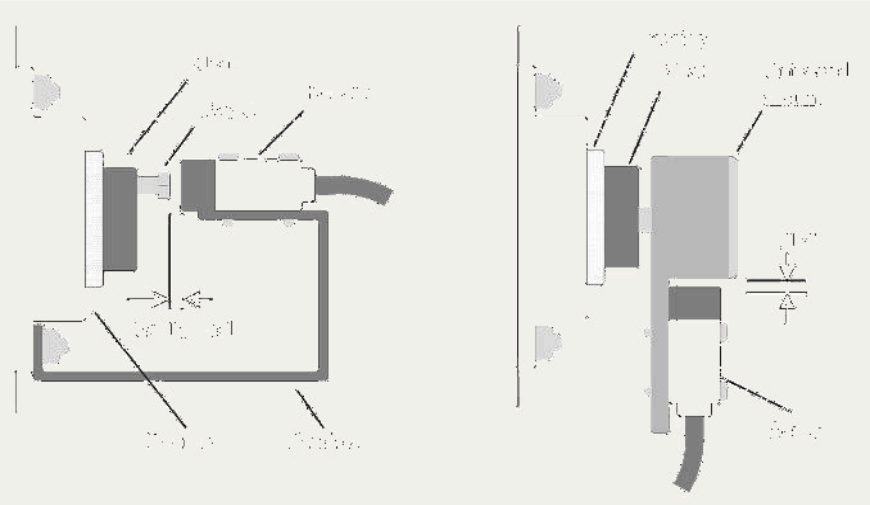

**Figure 42:** Speed sensor mount: Traditional (left) vs. Universal (right).

Since the sensor, the target, the bracket and the guard are all one assembly that hangs from the machine's shaft only a single hole drilled in the end of the machine's shaft is required for installation. Some systems are also available with a magnetic attachment so that no drilling or threading of the shaft is required. Note that magnet mounts will hold only on ferrous shafts, and not on stainless steel.

**Testing and system handover**

One of the most important parts of the installation will be the final system test. Competent installers should have a full understanding of how the system works and will have tested the system passively as the installation progresses. When it comes time to run the system a good electrician will be confident that the system will work as expected, but will nevertheless perform a full and thorough test of the system in the presence of the plant manager and other key personnel.

This test must be done in a safe manner, and without the introduction of conveyed or elevated material. Ideally, real life conditions should be forced so that the correct operation of the equipment, wiring, and auxiliary equipment can be confirmed. Upstream equipment should always be interlocked with downstream equipment so that automatic

shutdown will not result in a plug condition.

Full system testing begins at the sensor level. Sensor testing must be a functional test of the sensor throughout its operating range and through the alarm and shut down set points of the control unit and not just a simulation. Speed sensors are sometimes tested by placing a steel putty knife between the sensor and the rotating target. Not only can this potentially be dangerous, but all it does is interfere with the sensor and cause a catastrophic shut down. One method of testing speed sensors is with a controlled pulse generator. The handheld tester is calibrated to the conveyors 100% normal operating speed under no-load conditions and then the tester produces the signal read by the sensor. When the tester's pulse rate decreases below the system's underspeed alarm set point, the sensor and controller should respond appropriately and generate an alarm.

**Figure 43:** Speed sensor tester (left) and connected to sensor in universal shaft mount.
(Photo courtesy of Uniking, Ltd.)

Temperature sensors for bearing monitoring or belt misalignment can be partially tested by the use of freeze mist spray but that doesn't test it through the full operating range. For full operational verification, the sensing element should be heated throughout its expected maximum operation temperature. Similar to the handheld speed tester, this temperature sensor tester (see Figure 44) will heat the sensor probe and functionally verify its operation through its full range and the control unit's monitoring and shut down functionality.

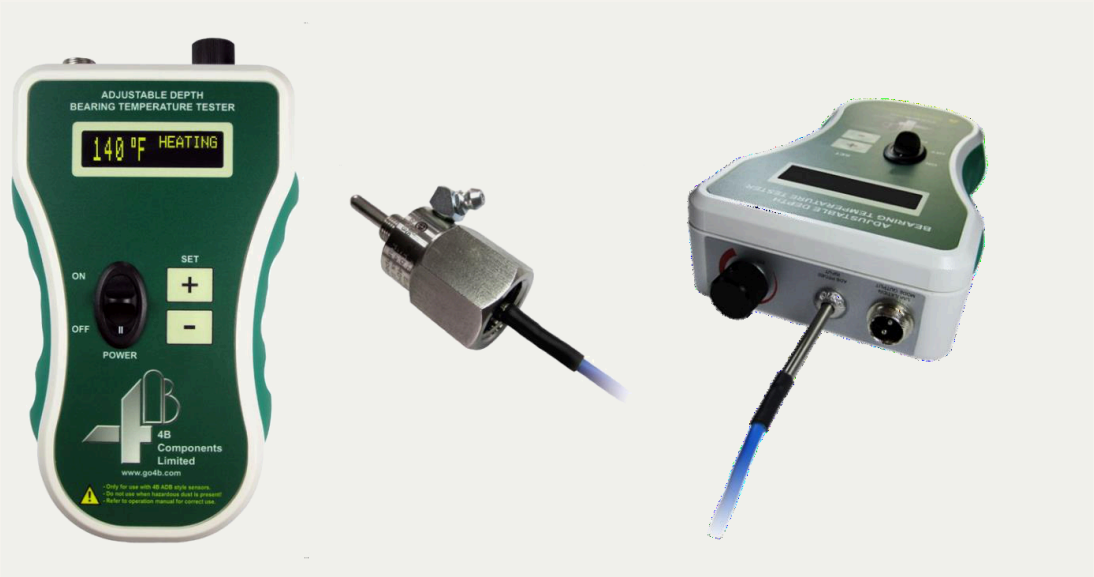


**Figure 44:** Temperature sensor tester (left) and probe insertion point (right).
(Photo courtesy of Uniking, Ltd.)

Some sensors have built-in testing capability. The contact, force activated belt misalignment sensor shown below, has a built-in test function. When the knob is turned, it exerts a force on the sensor face, thereby testing the internal strain gauge. When the knob is turned sufficiently clockwise to make the LED turn off, the sensor operation is verified. It is important to confirm that the control unit alarms and that the sensor is correctly identified in the system when the LED is off. The knob is then turned counterclockwise until the light turns on and the sensor returns to its operational state. The test is complete.

**Figure 45:** Misalignment sensor with built-in functional test.

After successful testing, the installation is complete and the system can be handed over. A final walk through by the plant manager and the installers will ensure that the manager has a full understanding of the sensors and controls which have been installed and the capability of the system. The manager will also ensure that the work areas have been cleaned and no debris has been left. During this handover there should be allowance for training of operators and key personnel. Instruction manuals, installation schematics, spare parts, emergency contact numbers and any outstanding issues should all be addressed.

## Maintenance

Even a solid state electronic monitoring system with failsafe design requires periodic maintenance to ensure that you will have trouble free monitoring and so that you can be confident that the system will perform when required. Some of the maintenance checks you can easily perform include:

- Follow manufacturers test procedures and record results. Remove from service any machine that shows a problem, until the monitoring system is up and running again.
- Physical inspection of the sensors and controls can provide invaluable information as to the status of the system. A sensor could have come loose from its mount and may need attention. Bearing sensors or belt misalignment sensors do no good when hanging in mid-air! Rub sensors can be rubbed through and only visual inspection can catch this.
- Test the system during initial commissioning and at regular intervals. If it does not alarm/shutdown as expected, shut down and lockout the equipment immediately and do not run it until the issues are corrected.
- Repair any damaged wiring connections found.
- Immediately repair any damage to hazard monitoring systems, such as broken flexible conduit, rigid conduit or damaged sensors. Replace missing junction box lids.
- On a regular basis, inspect contact style belt misalignment sensors for wear or damage. Physical checks of contact sensors should be made periodically, the frequency depending on the application and the amount and duration of detection.
- Check bearing temperatures using a hand held IR temperature sensor and compare this with what the system is indicating.
- Check pulley speeds and compare to initial system start-up values. If no values were recorded then make sure the belt is tight and not slipping, and compare unloaded and loaded rpm. There should be negligible reduction in speed when fully loaded.
- Where practical, compare resistance values of temperature sensor circuits to known start- up values.
- Never bypass safety equipment and do not disconnect alarm horns/lights.
- Educate your employees of the importance of the hazard monitoring alarm and consequences of disabling it.
- Treat hazard monitoring system data and feedback as valuable and insightful into your process.
- The hand held devices discussed in the previous section, **Testing and system handover**, are essential tools for hazard monitoring maintenance, inspection and testing. However, be sure to use either approved equipment or only when the dust hazard is not present.
- Make sure that you have selected the correct sensors and hazard monitors for the application
- When temporary removal of sensors is necessary for maintenance, reinstall them immediately, before starting equipment

NFPA 61-2020 and NFPA 654-2020 both direct that hazard monitoring equipment be inspected, tested and maintained and that the facility must have schedules and procedures for testing. Inspections and testing activities shall be documented and maintenance deficiencies that are identified, the operator shall establish and implement a corrective action with a deadline. It also provides for training and hazard awareness for employees and contractors. Furthermore, OSHA Standard 1910.272 App A (See standard For Full text & Interpretation) stresses that maintenance of monitoring systems be a top priority :

> *It is imperative that the prearranged schedule of maintenance be adhered to regardless of other facility constraints. The employer should give priority to the maintenance or repair work associated with safety control equipment…*

## Summary

The safe operation of plant and machinery within the grain and feed industry requires a conscientious effort from plant designers, machine manufacturers, installers, plant managers, operators, and maintenance personnel. The threat of a catastrophic event is always present and a well designed, professionally installed, and well maintained hazard monitoring system will help to make the plant safer and more productive.

## References

1. NFPA 49: Hazardous Chemicals Data (2001)
2. NFPA 61: Standard for the Prevention of Fires and Dust Explosions in Agricultural and Food Processing Facilities (2020)
3. NFPA 69: Standard on Explosion Prevention Systems (2019)
4. NFPA 70: National Electrical Code (2020)
5. NFPA 499: Recommended Practice for the Classification of Combustible Dusts and Hazardous (Classified) Locations for Electrical Installations in Chemical Process Areas (2021)
6. NFPA 652: Standard On The Fundamentals Of Combustible Dust (2019)
7. NFPA 654: Standard for the Prevention of Fire and Dust Explosions from the Manufacturing, Processing, and Handling of Combustible Particulate Solids (2020)
8. NMAB 353-4: Classifications of Dusts Relative to Electrical Equipment in Class II Hazardous Locations, published in 1982 by the Committee on Evaluation of Industrial Hazards, National Materials Advisory Board, Commission on Engineering and Technical Systems, National Research Council, and National Academy of Sciences.
9. OSHA Title 29: Code of Federal Regulations, Part 1910.272.
10. National Fire Codes Vol. II. The Prevention of Dust Explosions (1946) – NFPA
11. KSU – Dust Explosion Report (March 20, 2006) – Robert Schoeff
12. Dust Explosions in the Processing Industries (1999)- Rolf K Eckhoff
13. Combustible Dust in Industry: Preventing and Mitigating the Effects of Fire and Explosions, Safety and Health Information Bulletin SHIB 07-31-2005
14. Directive 2014/34/EU of the European Parliament and of the Council of 26 February 2014 on the harmonisation of the laws of the Member States relating to equipment and protective systems intended for use in potentially explosive atmospheres (recast) Text with EEA relevance

This document is available free of charge by visiting